INT CROSS TRAINER DLX SE4 ASL ENG BASE

INXDE-ALLXM-5101

Parts Manual

12/19/2024 9:32:42 AM

LifeFitness
WHAT WE LIVE FOR

Table of Contents

A Legend Description....3
Brake, Pulley, & Idler (Metal Crank Cover)....4
Brake, Pulley, & Idler (Plastic Crank Cover)....5
Clevis Covers....6
Crank Arms (Metal Crank Cover)....7
Crank Arms (Plastic Crank Cover)....8
Deadshaft Covers & Console Back....9
Front Rollers & Communication Port....10
Handlebars, Bullhorn, & Console Mount....11
Leg Levelers, Battery, & PCB Assembly....12
Link Shrouds and Pedal Levers....13
Pedals & Miscellaneous....15
Pedal Levers Hardware....16
Power Cords....17
Rear Shrouds....18
Rocker Arms....19
Roller....20
Timing Link (Plastic Anti-Lift Bracket)....21
Timing Link (Plastic Tie Rod)....22
Upper Shrouds & Cup Holder....23
Wiring Diagram - Integrity Base with Integrity SL and Discover SE4 Consoles...24

A Legend Description

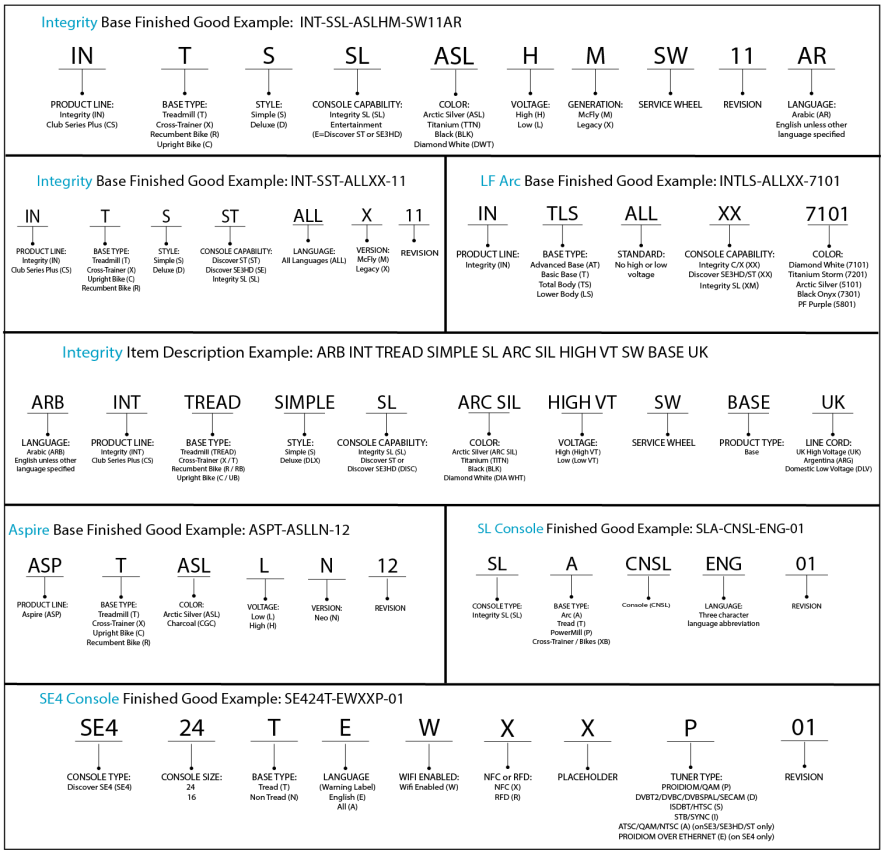

Ref #	Part Number	Qty	Description
-	LEGEND_DESCRIPTION	1	LEGEND DESCRIPTION

Brake, Pulley, & Idler (Metal Crank Cover)

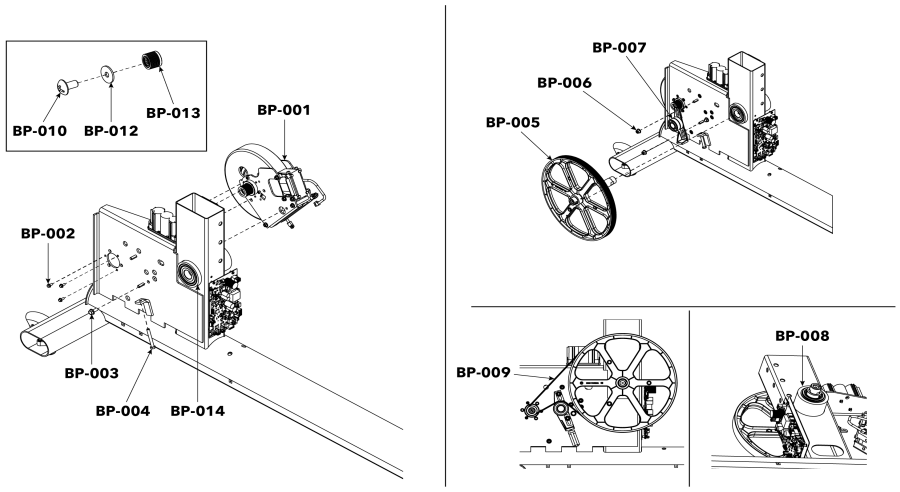

See KB Article
https://lifefitness9512.zendesk.com/hc/en-us/articles/5974209610519-Life-Fitness-Integrity-Cross-Trainer-Crank-Arm-Cover-Update

Ref #	Part Number	Qty	Description
BP-001	1003401-0001	1	GENERATOR: W/BRAKE, W/O CLUTCH, 10 RIB PULLEY
BP-002	0017-00101-2151	3	SCREW: M5 X 0.8 6G6G X 12, FLANGE, HEAD, CS, G5, CD
BP-003	0017-00101-2150	1	SCREW: M8 X 1.25 6G6H X 20, UHS, HXW, CS, ST, ZB
BP-004	0017-00101-2002	1	SCREW: M8 X 1.25-6G6G X 60, DIN, UNS, HEX, CS, G5, CD
BP-005	1002566-0000	1	PULLEY: OVERMOLD, SHAFT
BP-006	1003388-0001	2	NUT: M8 X 1.25-6H, DIN, UNF, HEX, LOCKNUT
BP-007	1001619-0001	1	ASSEMBLY: IDLER
BP-008	1001022-0001	1	BEARING: 62 MM X 30, BALL, INSERT
BP-009	1002564-0001	1	BELT: POLY-V 550 J10
BP-010	0K66-01129-0000	1	SCREW: M5 X 0.5-6G6G X 10, PULLEY, GENERATOR
BP-012	0K66-01130-0000	1	WASHER: M5.5 X 18 X 1.45, PULLEY, GENERATOR
BP-013	0K69-01193-0001	1	PULLEY: GENERATOR, 10 RIB
BP-014	1012808-0001	1	BEARING: M30 X 72, BAL, ST

Brake, Pulley, & Idler (Plastic Crank Cover)

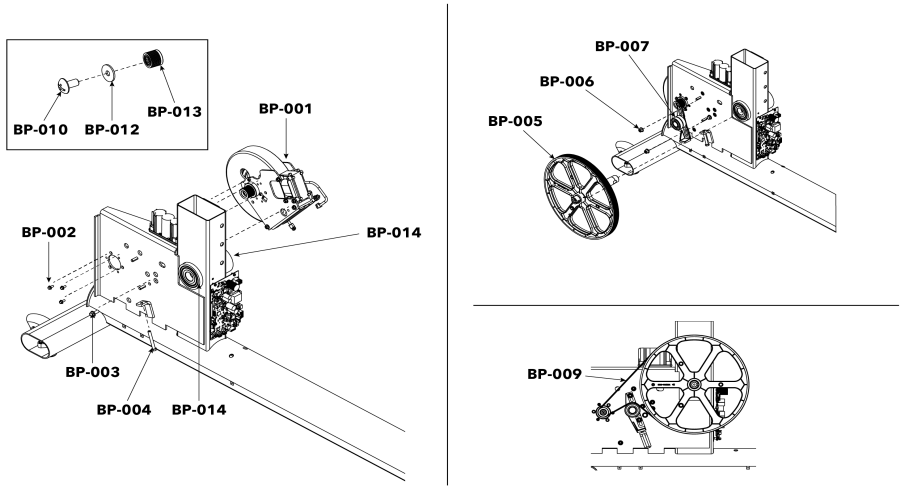

See KB Article
https://lifefitness9512.zendesk.com/hc/en-us/articles/5974209610519-Life-Fitness-Integrity-Cross-Trainer-Crank-Arm-Cover-Update

Ref #	Part Number	Qty	Description
BP-001	1003401-0001	1	GENERATOR: W/BRAKE, W/O CLUTCH, 10 RIB PULLEY
BP-002	0017-00101-2151	3	SCREW: M5 X 0.8 6G6G X 12, FLANGE, HEAD, CS, G5, CD
BP-003	0017-00101-2150	1	SCREW: M8 X 1.25 6G6H X 20, UHS, HXW, CS, ST, ZB
BP-004	0017-00101-2002	1	SCREW: M8 X 1.25-6G6G X 60, DIN, UNS, HEX, CS, G5, CD
BP-005	1012942-0000	1	PULLEY: OVERMOLD, SHAFT
BP-006	1003388-0001	2	NUT: M8 X 1.25-6H, DIN, UNF, HEX, LOCKNUT
BP-007	1001619-0001	1	ASSEMBLY: IDLER
BP-009	1002564-0001	1	BELT: POLY-V 550 J10
BP-010	0K66-01129-0000	1	SCREW: M5 X 0.5-6G6G X 10, PULLEY, GENERATOR
BP-012	0K66-01130-0000	1	WASHER: M5.5 X 18 X 1.45, PULLEY, GENERATOR
BP-013	0K69-01193-0001	1	PULLEY: GENERATOR, 10 RIB
BP-014	1012808-0001	2	BEARING: M30 X 72, BAL, ST

Clevis Covers

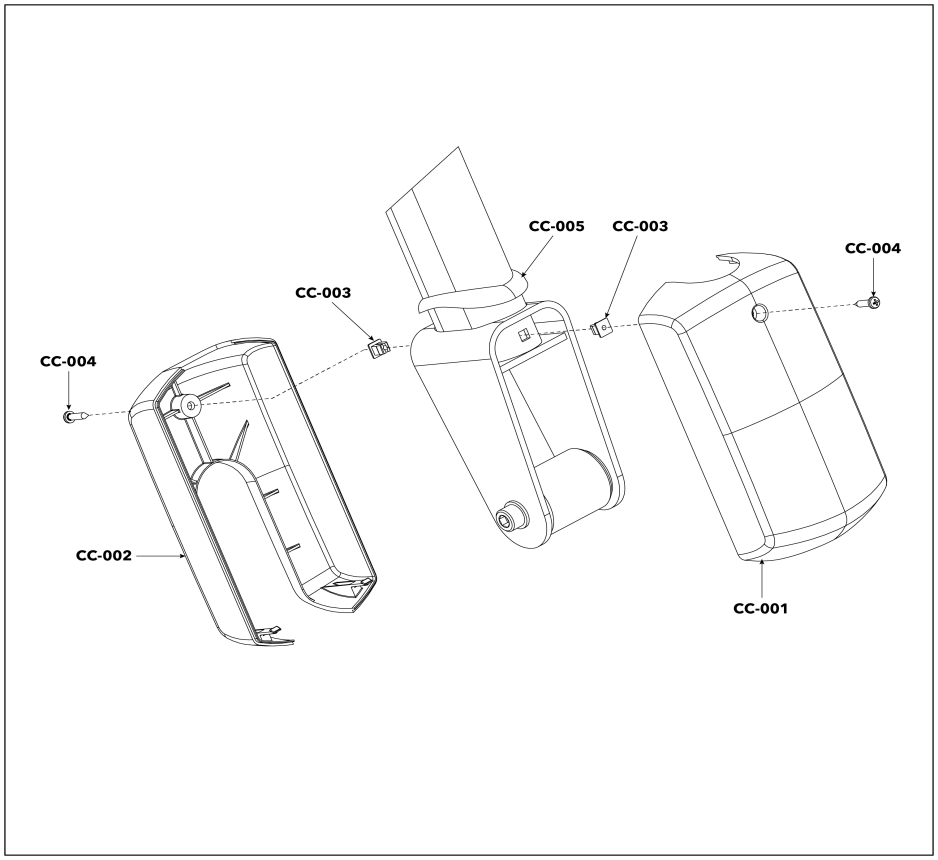

Ref #	Part Number	Qty	Description
CC-001	1002594-2400	2	SHROUD: CLEVIS, FRONT, CHARCOAL GRAY
CC-002	1002595-2400	2	SHROUD: CLEVIS, BACK, CHARCOAL GRAY
CC-003	0017-00042-1147	4	GROMMET: SCREW, 8 OR 10
CC-004	0017-00101-1796	4	SCREW: M4.2 X 0.7 6G6G X 19, DIN, PHL, PAN, AB, ST, ZB
CC-005	1002567-0000	2	GASKET: ROCKER ARM

Crank Arms (Metal Crank Cover)

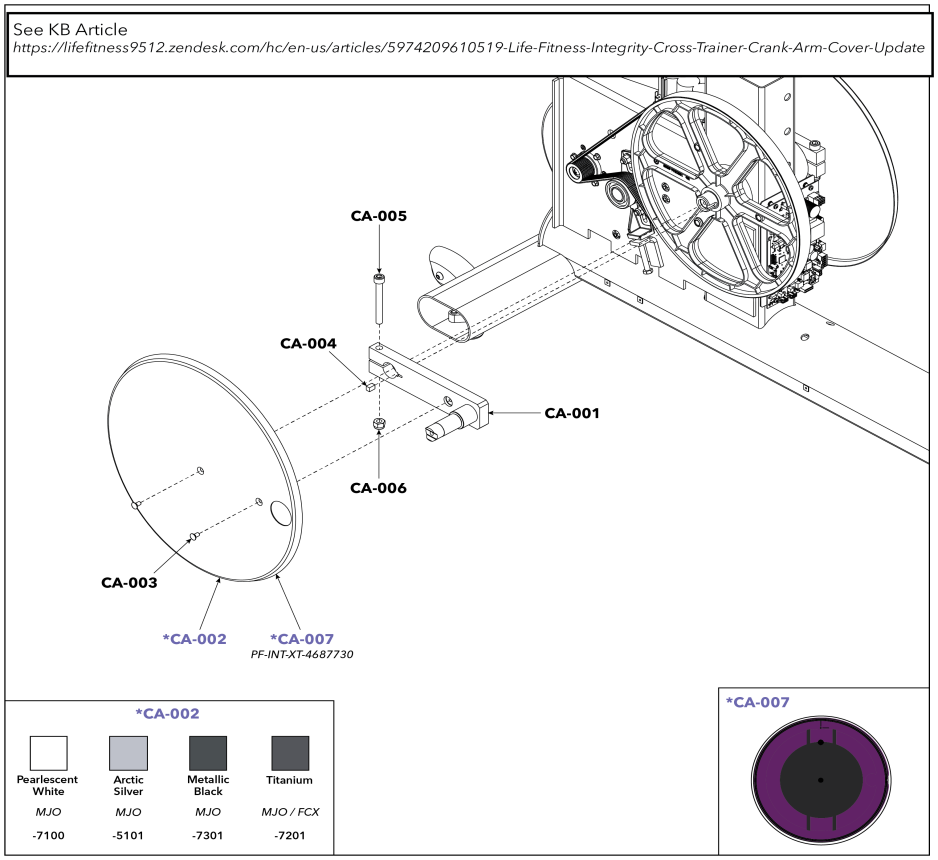

Ref #	Part Number	Qty	Description
CA-001	1001018-0001	2	WELDMENT: CRANK ARM
CA-002	1001020-0000	2	COVER: CRANK ARM
CA-003	0017-00101-1988	4	SCREW: M6 X 1-6G6G X 12, DIN, SOC, FLT, CS, ST, ZB
CA-004	1002599-0001	2	KEY: 8M X 7 X 12, SQK
CA-005	1011066-0001	2	SCREW: M10 X 1.5 X 65, SHCS
CA-006	0017-00103-0334	2	NUT: M10 X 1.50-6H6H, DIN, LOCKNUT, ST, ZB
CA-007	1012959-0001	1	ASSEMBLY: COVER W/DECAL, CRANK ARM, CHGR

Crank Arms (Plastic Crank Cover)

See KB Article
https://lifefitness9512.zendesk.com/hc/en-us/articles/5974209610519-Life-Fitness-Integrity-Cross-Trainer-Crank-Arm-Cover-Update

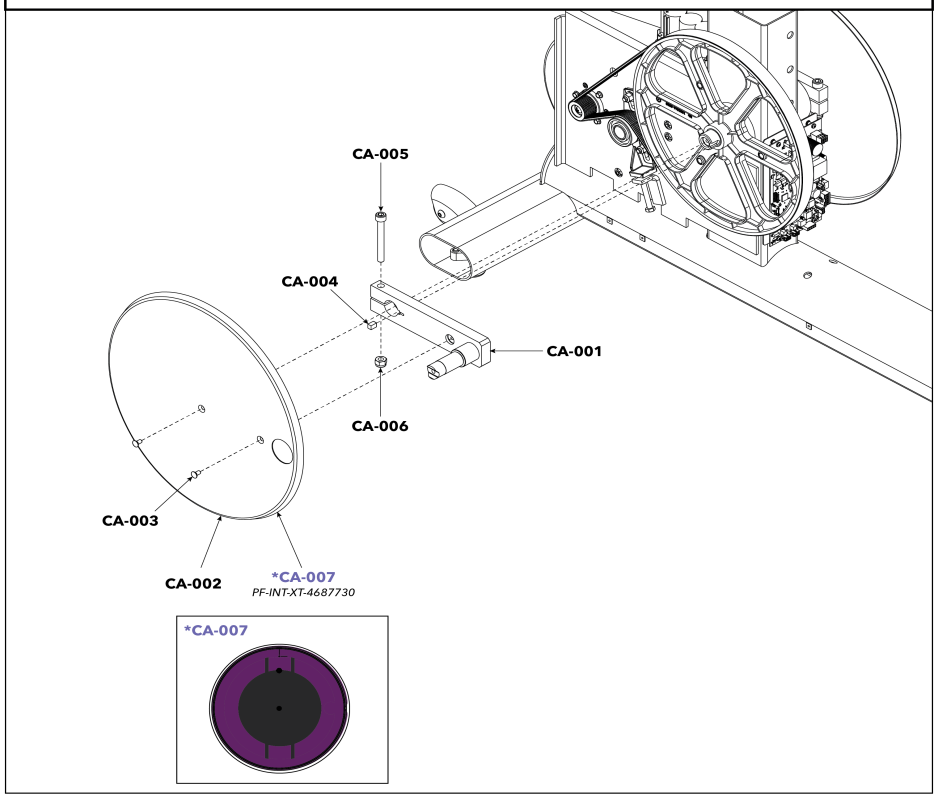

Ref #	Part Number	Qty	Description
CA-001	1012941-0001	2	WELDMENT: CRANK ARM
CA-002	1011279-0001	2	COVER: CRANK ARM
CA-003	1005398-0001	4	SCREW: M6 X 1.0 X 16, DIN, HEX, SOC, CS, ST, BO
CA-004	1002599-0001	2	KEY: 8M X 7 X 12, SQK
CA-005	1011066-0001	2	SCREW: M10 X 1.5 X 65, SHCS
CA-006	0017-00103-0334	2	NUT: M10 X 1.50-6H6H, DIN, LOCKNUT, ST, ZB
CA-007	1017614-0001	1	ASSEMBLY: COVER W/DECAL, PF

Deadshaft Covers & Console Back

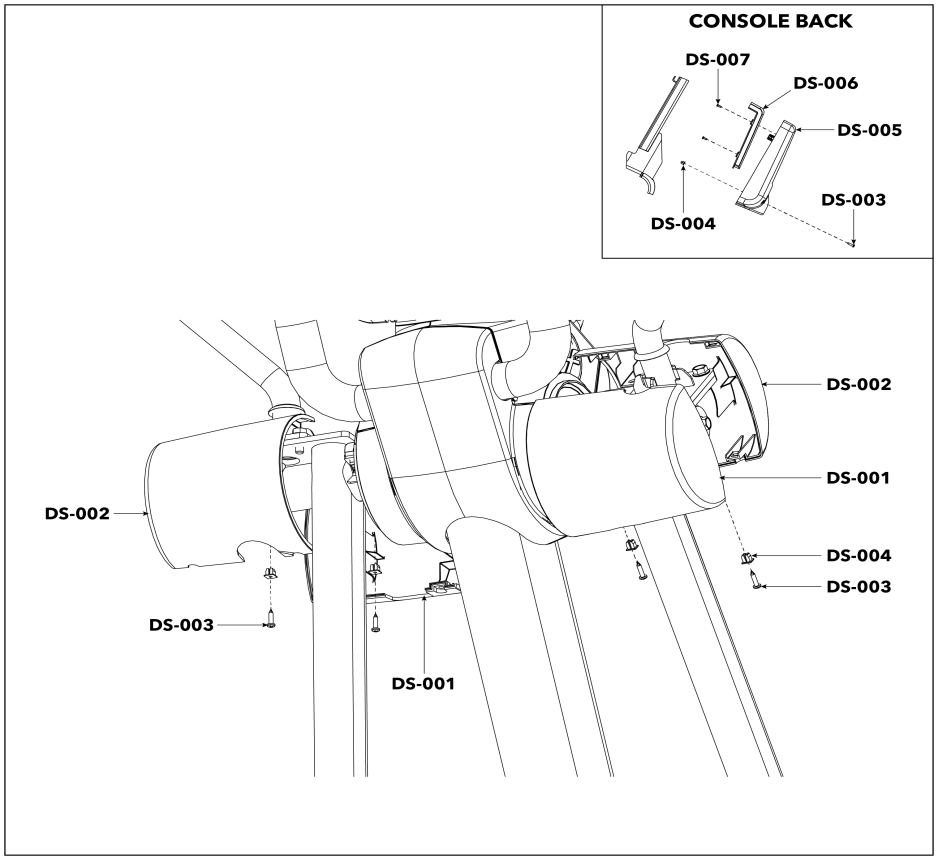

Ref #	Part Number	Qty	Description
DS-001	1002573-2400	2	SHROUD: DEADSHAFT, A, CHARCOAL GRAY
DS-002	1002574-2400	2	SHROUD: DEADSHAFT, B, CHARCOAL GRAY
DS-003	0017-00101-1796	6	SCREW: M4.2 X 0.7 6G6G X 19, DIN, PHL, PAN, AB, ST, ZB
DS-004	0017-00042-1147	6	GROMMET: SCREW, 8 OR 10
DS-005	1002578-2400	1	SHROUD: CONSOLE, BACK, CHARCOAL GRAY
DS-006	1012962-0001	1	ASSEMBLY: REAR SHROUD W/DECAL, FILLER, CHGR
DS-007	0017-00101-1650	4	SCREW: 6-19 X 6, PHL, PAN, PLT, ST, ZB, VMI

Front Rollers & Communication Port

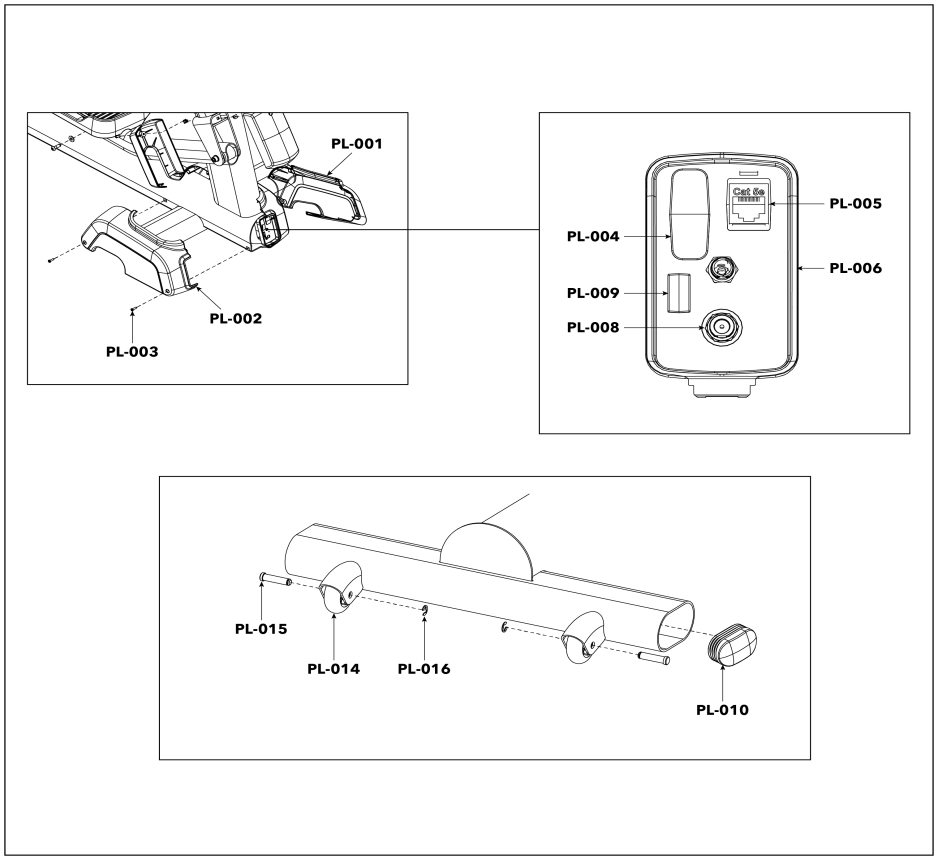

Ref #	Part Number	Qty	Description
PL-001	1002581-2400	1	SHROUD: MONOCOLUMN, LOWER, LEFT, CHARCOAL GRAY
PL-002	1002582-2400	1	SHROUD: MONOCOLUMN, LOWER, RIGHT, CHARCOAL GRAY
PL-003	0017-00101-1796	2	SCREW: M4.2 X 0.7 6G6G X 19, DIN, PHL, PAN, AB, ST, ZB
PL-004	1005393-0700	1	PLUG: HDMI, BLACK
PL-005	1004601-0001	1	PLUG: RJ45 RECEPTACLE
PL-006	1002587-2400	1	SHROUD: COMMUNICATION PORT, CHARCOAL GRAY
PL-008	1005470-0700	1	PLUG: IR PORT, BLACK
PL-009	0017-00021-2846	1	CONNECTOR: COAX, PANEL MOUNT
PL-010	1024927-0001	4	KIT: ENDCAP: FLOV : INJ MOLDED
PL-014	1010977-0001	2	WHEEL: NON-TREAD
PL-015	1011048-0001	2	CLEVIS PIN: 10mm O.D.
PL-016	1011049-0001	2	RING: M10, E-RING, ST

Handlebars, Bullhorn, & Console Mount

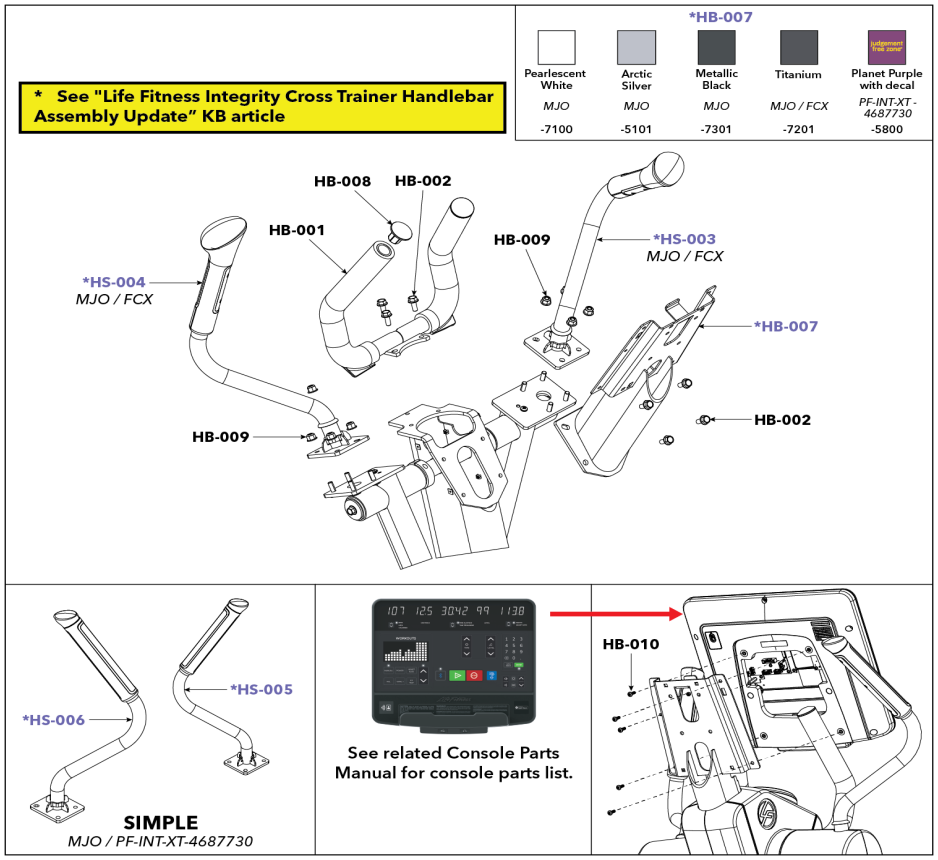

Ref #	Part Number	Qty	Description
HB-001	1001059-0700	1	WELDMENT: BULLHORN, BLACK
HB-002	0017-00101-2150	15	SCREW: M8 X 1.25 6G6H X 20, UHS, HXW, CS, ST, ZB
HB-003	1012645-7401	1	ASSEMBLY: HANDLEBAR, FEATURED, LEFT, CHARCOAL GRAY ROBUST
HB-004	1012647-7401	1	ASSEMBLY: HANDLEBAR, FEATURED, RIGHT, CHARCOAL GRAY ROBUST
HB-005	1012649-7401	1	ASSEMBLY: HANDLEBAR, SIMPLE, LEFT, CHARCOAL GRAY ROBUST
HB-006	1012651-7401	1	ASSEMBLY: HANDLEBAR, SIMPLE, RIGHT, CHARCOAL GRAY ROBUST
HB-007	1001029-0000	1	WELDMENT: CONSOLE MOUNT
HB-008	0K63-01114-0000	2	HANDLEBAR: ENDCAP
HB-009	1003388-0001	8	NUT: M8 X 1.25-6H, DIN, UNF, HEX, LOCKNUT
HB-010	0017-00101-1940	5	SCREW: M5 X 0.8 X 14, PHL, PAN, MS, ST, ZN

Leg Levelers, Battery, & PCB Assembly

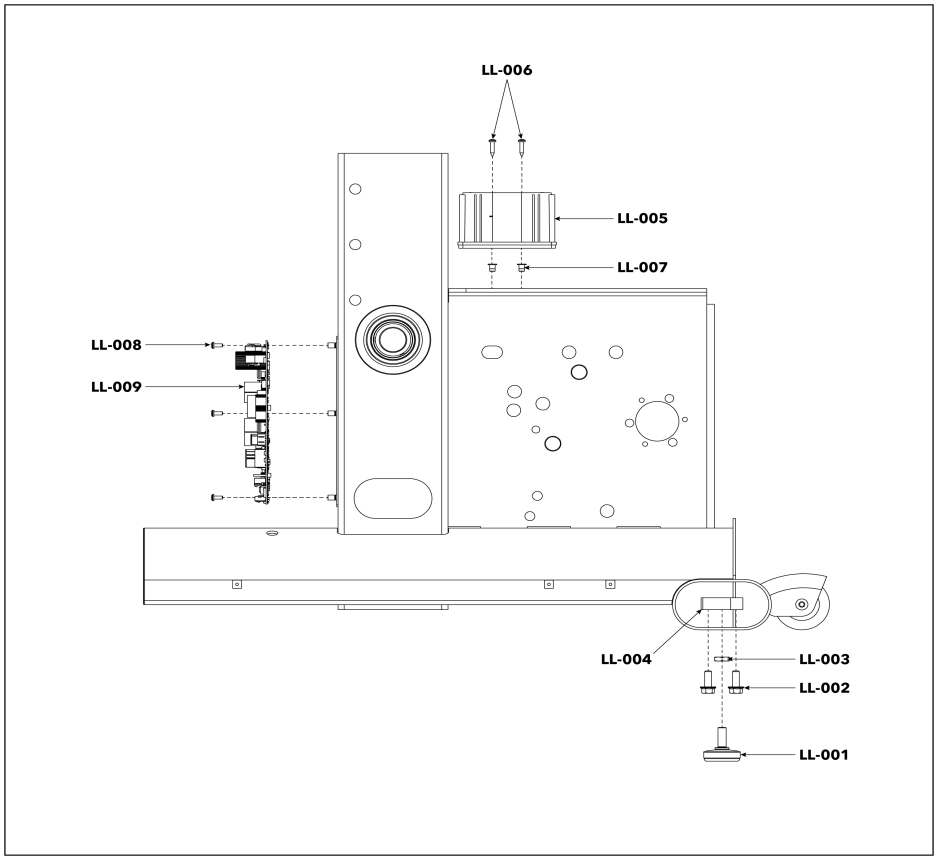

Ref #	Part Number	Qty	Description
LL-001	0K62-01178-0000	4	LEVELER: M10 X 1.50, LEG
LL-002	0017-00101-2150	8	SCREW: M8 X 1.25 6G6H X 20, UHS, HXW, CS, ST, ZB
LL-003	0017-00103-0330	4	NUT: M10 X 1.50 - 6H6H, DIN, D JAM, ST, ZB
LL-004	1001040-0001	4	BLOCK: LEVELER
LL-005	0017-00003-0685	1	BATTERY: 6 VOLT, 2.5AH C (0819-1006)
LL-006	0017-00101-1796	2	SCREW: M4.2 X 0.7 6G6G X 19, DIN, PHL, PAN, AB, ST, ZB
LL-007	0017-00042-1147	2	GROMMET: SCREW, 8 OR 10
LL-008	0017-00101-1989	5	SCREW: M4 X 6G6G X 10, PHL, PAN, ST, ZN
LL-009	1015538-0011	1	PCB ASSY: RCB MCFLY

Link Shrouds and Pedal Levers

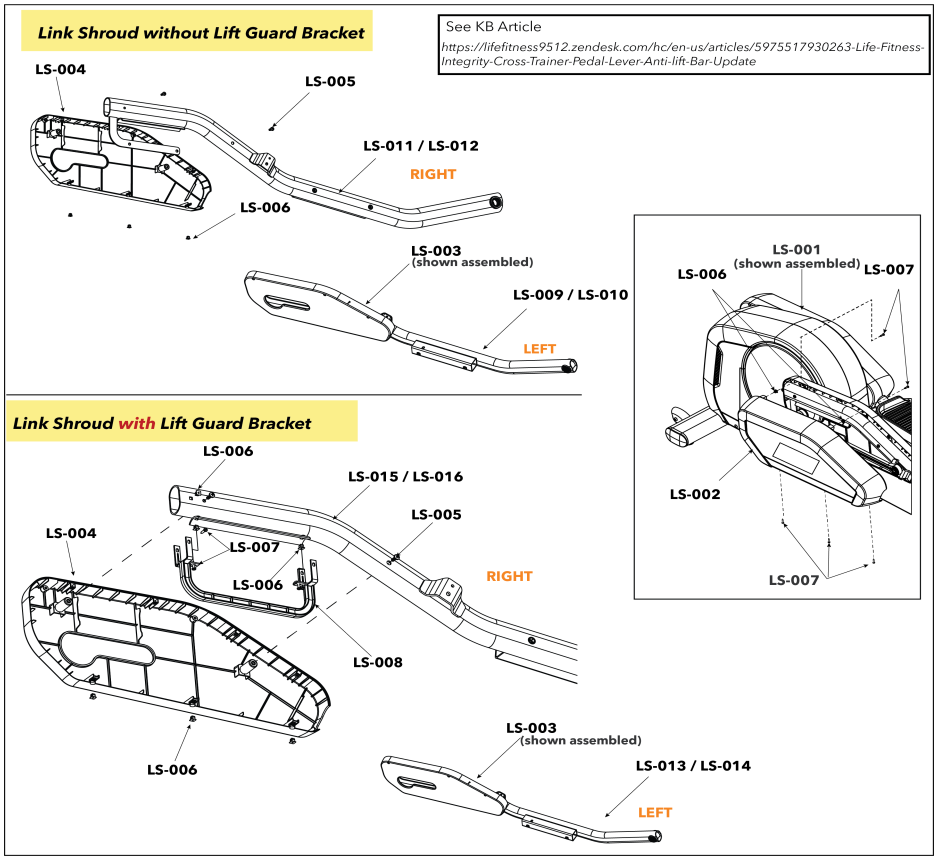

Ref #	Part Number	Qty	Description
LS-001	1012957-0001	1	ASSEMBLY: SHROUD W/DECAL, OUTER, LEFT, CHGR
LS-002	1012958-0001	1	ASSEMBLY: SHROUD W/DECAL, OUTER, RIGHT, CHGR
LS-003	1002589-2400	1	SHROUD: LINK, INNER, LEFT, CHARCOAL GRAY
LS-004	1002588-2400	1	SHROUD: LINK, INNER, RIGHT, CHARCOAL GRAY
LS-005	1005249-0001	4	SCREW: M6 X 1 X 16, DIN, UNS, HXW, SERRATED, CS, ST, ZB
LS-006	0017-00042-1147	6	GROMMET: SCREW, 8 OR 10
LS-007	0017-00101-1796	6	SCREW: M4.2 X 0.7 6G6G X 19, DIN, PHL, PAN, AB, ST, ZB
LS-008	1013134-0001	1	BRACKET: LIFT GUARD
LS-009	1001096-7400	1	ASSEMBLY: PEDAL LEVER, LEFT, W/HARDWARE, CHARCOAL GRAY ROBUST
LS-010	1001096-5800	1	ASSEMBLY: PEDAL LEVER, LEFT, W/HARDWARE, PURPLE ROBUST
LS-011	1001097-7400	1	ASSEMBLY: PEDAL LEVER, RIGHT, W/HARDWARE, CHARCOAL GRAY ROBUST
LS-012	1001097-5800	1	ASSEMBLY: PEDAL LEVER, RIGHT, W/HARDWARE, PURPLE ROBUST
LS-013	1015237-5300	1	ASSEMBLY: PEDAL LEVER, LEFT, W/HARDWARE, CHARCOAL GRAY SMOOTH
LS-014	1015237-5800	1	ASSEMBLY: PEDAL LEVER, LEFT, W/HARDWARE, PURPLE ROBUST

Ref #	Part Number	Qty	Description
LS-015	1015236-5300	1	ASSEMBLY: PEDAL LEVER, RIGHT, W/HARDWARE, CHARCOAL GRAY SMOOTH
LS-016	1015236-5800	1	ASSEMBLY: PEDAL LEVER, RIGHT, W/HARDWARE, PURPLE ROBUST

Pedals & Miscellaneous

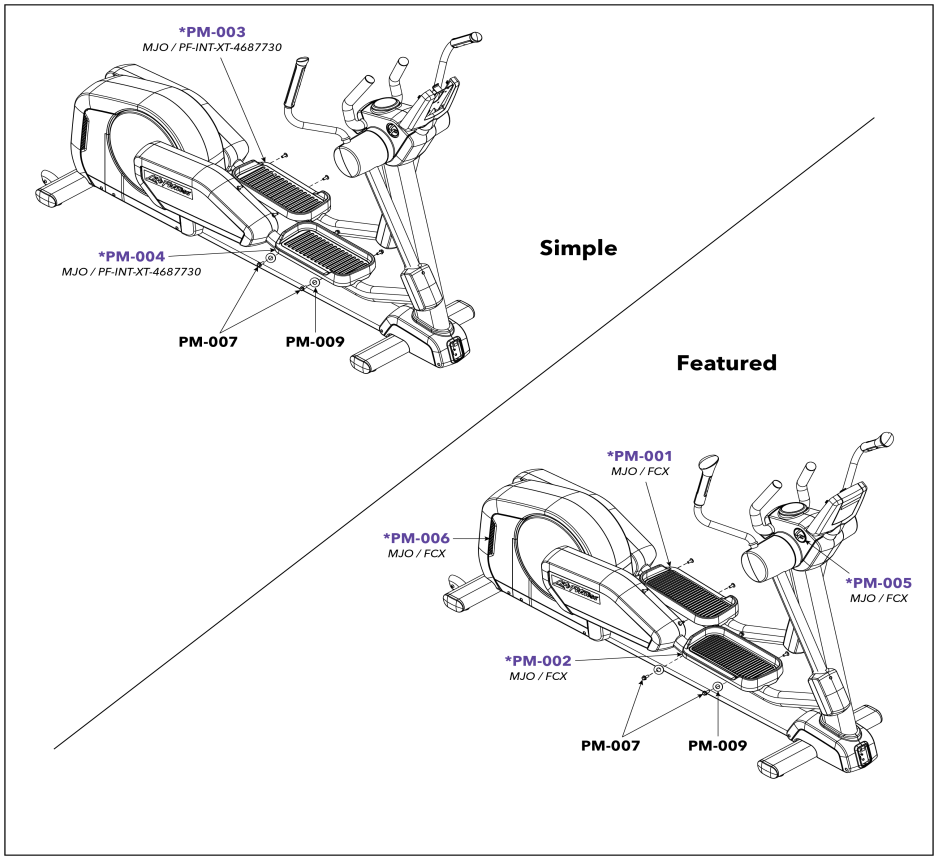

Ref #	Part Number	Qty	Description
PM-001	1008296-0001	1	ASSEMBLY: PEDAL W/LABEL; LEFT
PM-002	1008297-0001	1	ASSEMBLY: PEDAL W/LABEL; RIGHT
PM-003	1002559-0700	1	PEDAL: LEFT, SIMPLE, BLACK
PM-004	1002560-0700	1	PEDAL: RIGHT, SIMPLE, BLACK
PM-005	AK58-00245-2401	1	MEDALLION-ASSY: BUG, LIFE FITNESS, CHARCOAL GRAY
PM-006	1005455-0001	1	DECAL: REAR SHROUD VENT, CROSSTRAINER
PM-007	0017-00101-1929	8	SCREW: M8 X 1.25-6G6G X 25, DIN, HEX, BUT, CS, ST
PM-009	0017-00104-0510	8	WASHER: M8.4 X 19 X 1.6, DIN, FLAT, ST, ZB

Pedal Levers Hardware

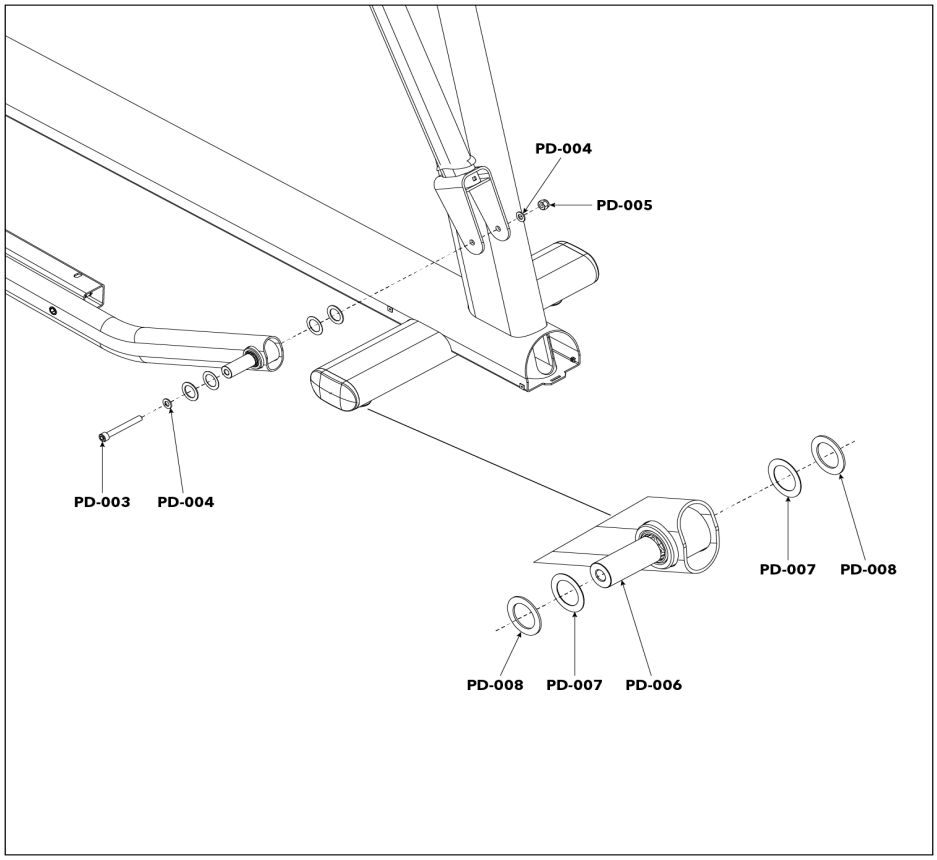

Ref #	Part Number	Qty	Description
PD-003	1000721-0001	2	SCREW: M10 X 1.5 X 85, SHCS
PD-004	0017-00104-0470	4	WASHER: M10.5 X 20 X 2, DIN, DFLAT, ST, ZB
PD-005	0017-00103-0334	2	NUT: M10 X 1.50-6H6H, DIN, LOCKNUT, ST, ZB
PD-006	0K69-01075-0000	2	SHAFT: ROCKER, FRONT
PD-007	0K69-01190-0000	4	WASHER: 1.0 INCH X 1.5, THRUST, STEEL
PD-008	0K47-01104-0000	4	WASHER: BEARING, THRUST

Power Cords

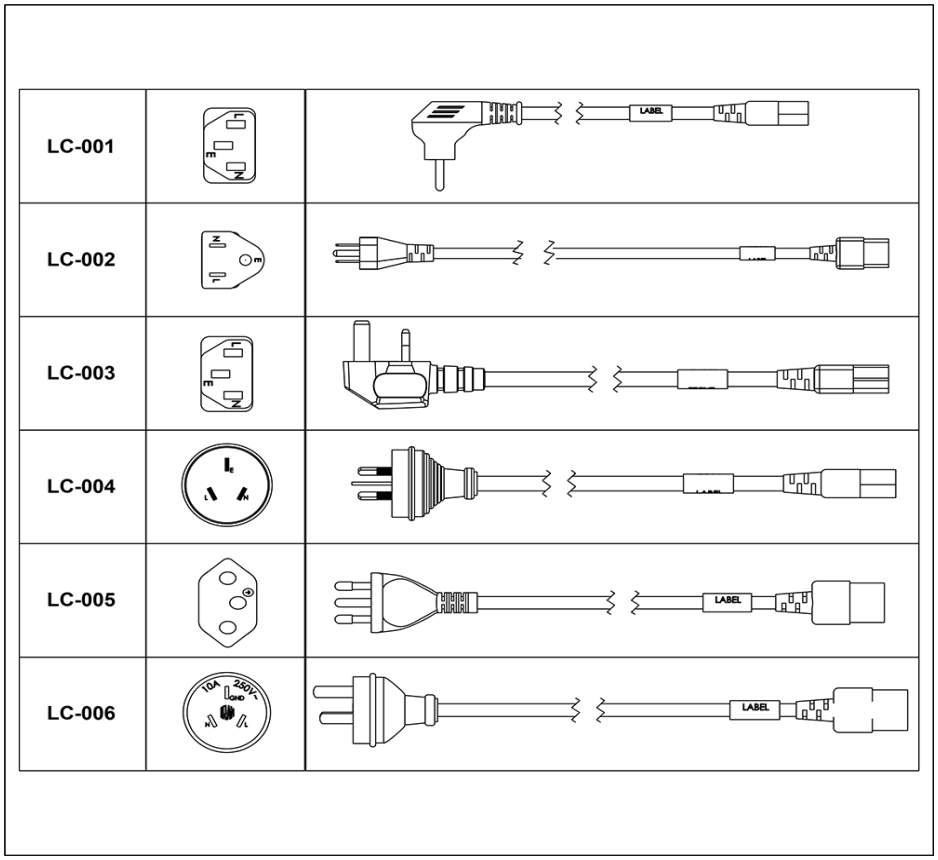

Ref #	Part Number	Qty	Description
LC-001	0017-00003-0691	1	LINE-CORD: CON 10A 250V B
LC-002	0017-00003-0704	1	LINE-CORD: DOM. 10A 125V B
LC-003	0017-00003-0889	1	LINE-CORD: 10A; U.K B
LC-004	0017-00003-0918	1	LINE-CORD: AUSTRALIA B
LC-005	0017-00003-1053	1	LINE-CORD: BRAZIL, IEC-C13
LC-006	0017-00003-1067	1	LINE-CORD: ARGENTINA, IRAM 2073, IEC-C13

Rear Shrouds

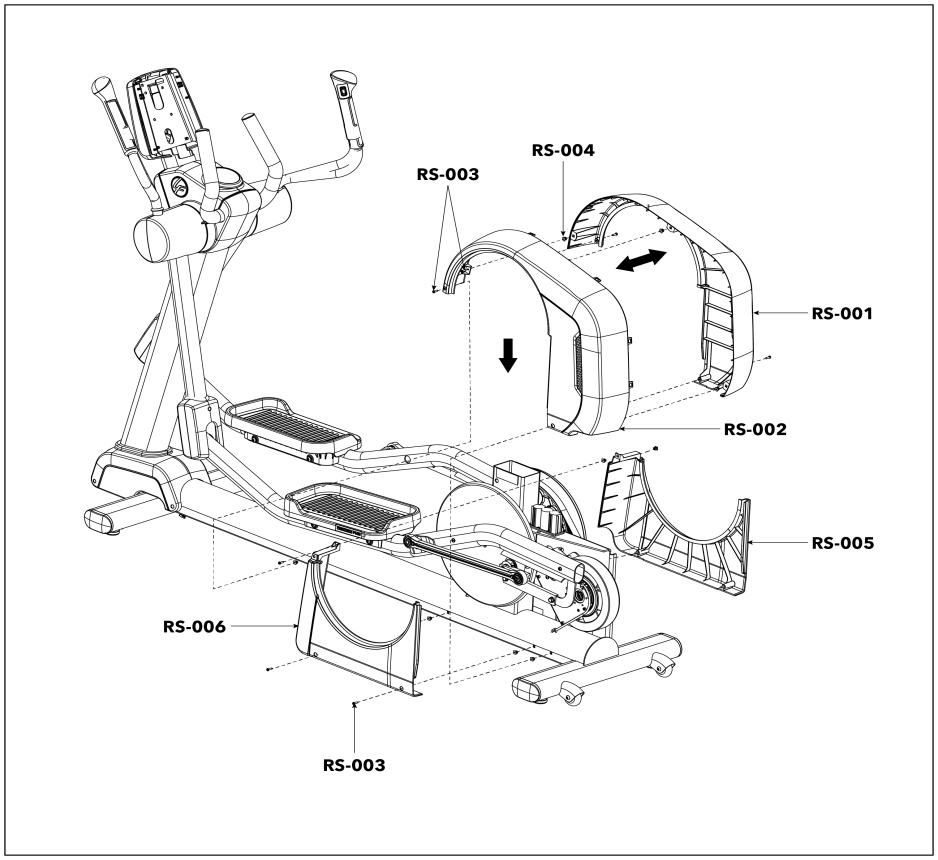

Ref #	Part Number	Qty	Description
RS-001	1002583-2400	1	SHROUD: REAR, UPPER, RIGHT, CHARCOAL GRAY
RS-002	1002584-2400	1	SHROUD: REAR, UPPER, LEFT, CHARCOAL GRAY
RS-003	0017-00101-1796	12	SCREW: M4.2 X 0.7 6G6G X 19, DIN, PHL, PAN, AB, ST, ZB
RS-004	0017-00042-1147	12	GROMMET: SCREW, 8 OR 10
RS-005	1002585-2400	1	SHROUD: REAR, LOWER, RIGHT, CHARCOAL GRAY
RS-006	1002586-2400	1	SHROUD: REAR, LOWER, LEFT, CHARCOAL GRAY

Rocker Arms

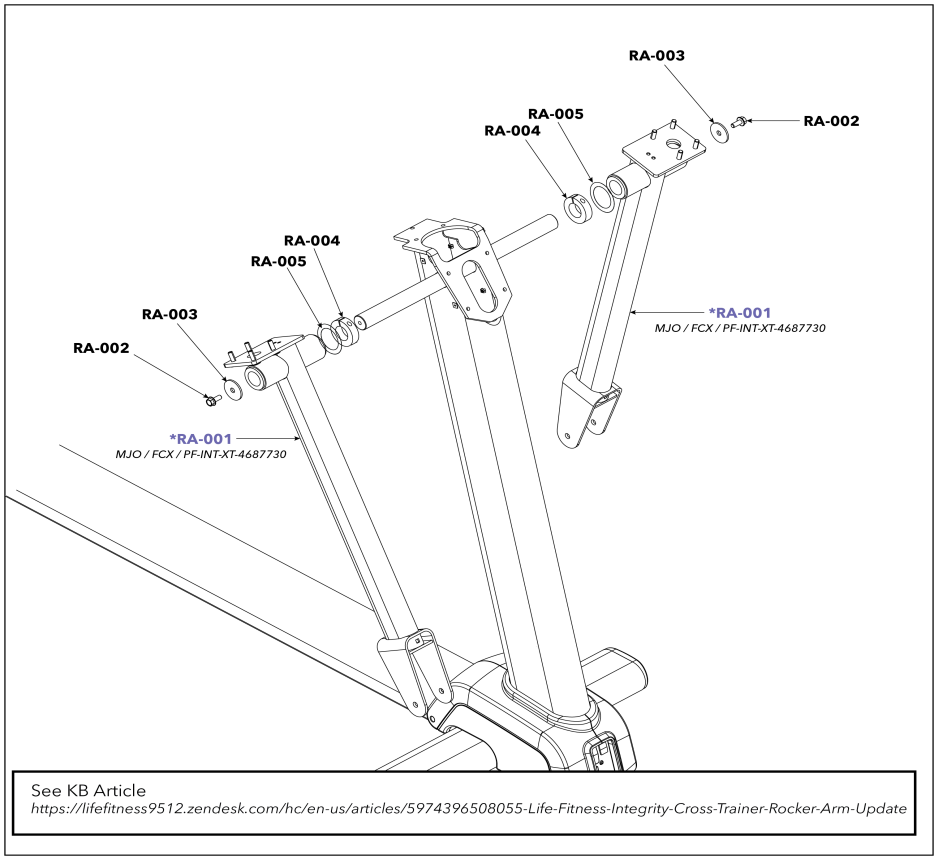

Ref #	Part Number	Qty	Description
RA-001c	1012641-5301	2	ASSEMBLY: ROCKER ARM, CHARCOAL GRAY SMOOTH
RA-001b	1012641-7401	2	ASSEMBLY: ROCKER ARM, CHARCOAL GRAY ROBUST
RA-001a	1012641-5801	2	ASSEMBLY: ROCKER ARM, PURPLE ROBUST
RA-002	0017-00101-2150	2	SCREW: M8 X 1.25 6G6H X 20, UHS, HXW, CS, ST, ZB
RA-003	0017-00104-0454	2	WASHER: 0.390 INCH X 1.625 X 0.120
RA-004	0K69-01018-0000	2	COLLAR: 30 MM ID, SHAFT
RA-005	0017-00104-0418	2	VMI WSH 1.2-1.75-060 FL-D ST ZN B

Roller

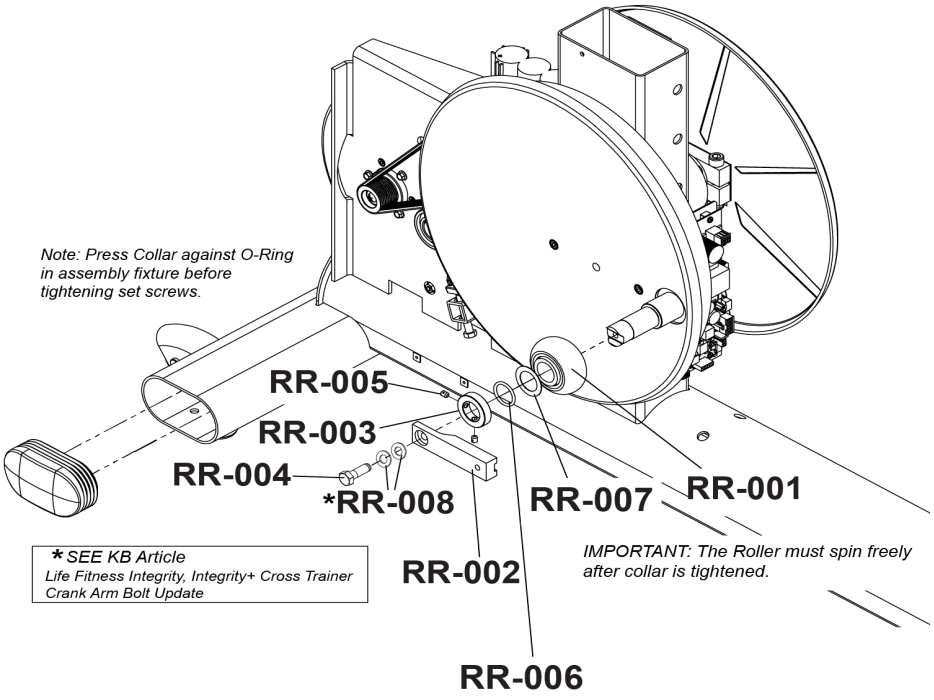

Ref #	Part Number	Qty	Description
RR-001	AK61-00063-0000	2	ASSEMBLY: ROLLER, W/BEARING
RR-002	1001015-0001	2	BAR: EXTENSION ARM
RR-003	1009112-0001	2	COLLAR: M25, SHAFT
RR-004	0017-00101-2114	2	SCR: M8.0 X 1.25-6G6G X 25 DIN UNS HEX CS ST ZB
RR-005	1009209-0001	2	SCREW: M6 X 1 X 8, CUP POINT, SET SCREW
RR-006	1023236-0001	2	O-RING: 25MM ID X 3MM
RR-007	0K69-01190-0000	2	WASHER: 1.0 INCH X 1.5, THRUST, STEEL
RR-008	0017-00104-0469	2	WASHER: M8.4 X 16.0 X 1.6, DIN, FLAT, ST, ZB

Timing Link (Plastic Anti-Lift Bracket)

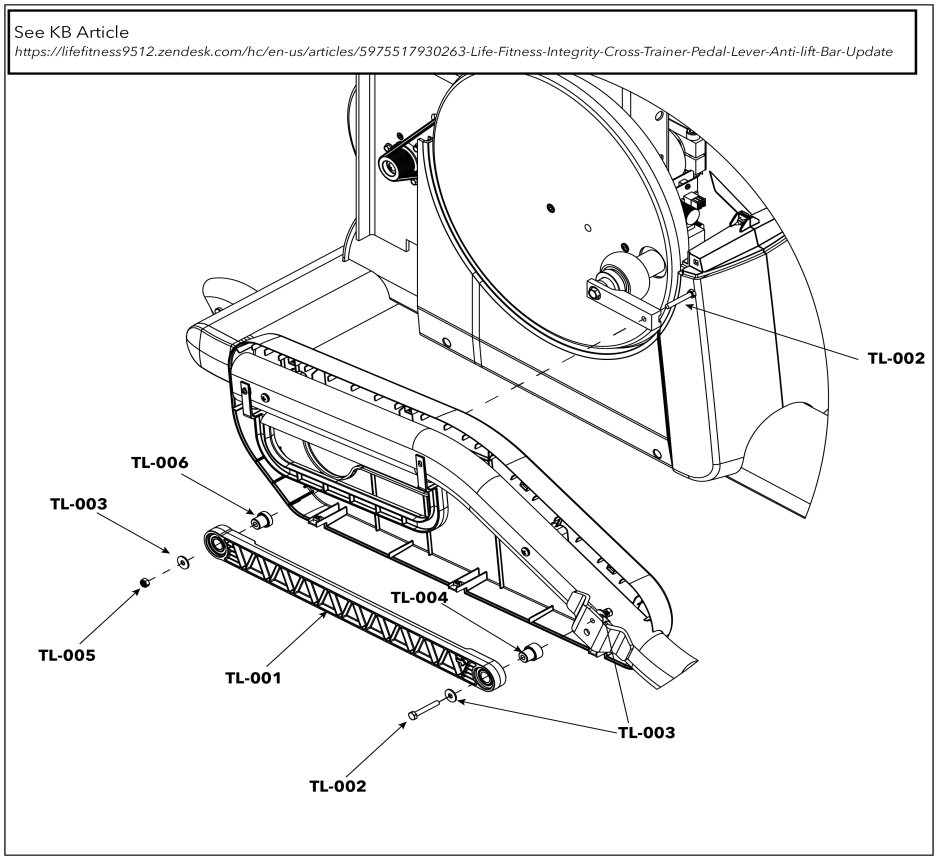

Ref #	Part Number	Qty	Description
TL-001	1012417-0001	1	ASSEMBLY: TIE ROD, W/ BRGS
TL-002	0017-00101-2064	4	SCREW: M6 X 1 X 40, HEX HEAD, CAP
TL-003	0017-00104-0468	6	WASHER: M6.4 X 18 X 1.6, DIN, FLAT, G5, ZB
TL-004	1017736-0001	2	BUSHING: BEARING, TIMING LINK
TL-005	0017-00103-0378	4	NUT: M6 X 1-6H6H, DIN, LOCKNUT, ST, BZ
TL-006	1017737-0001	2	BUSHING: BEARING, TIMING LINK

Timing Link (Plastic Tie Rod)

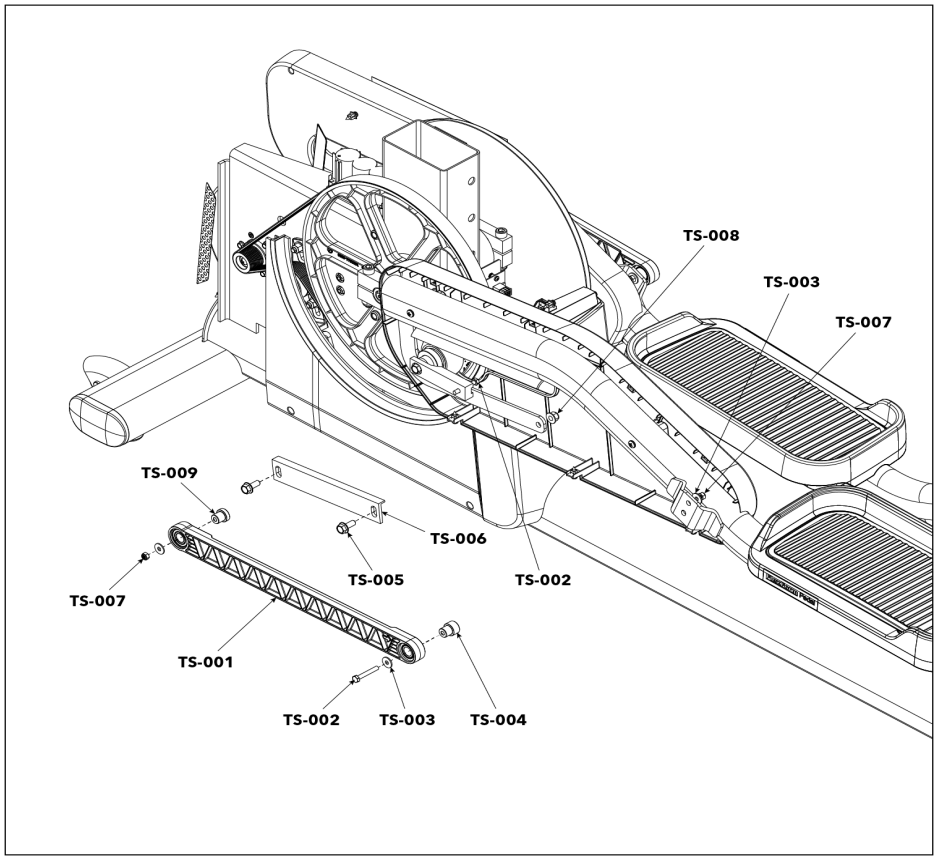

Ref #	Part Number	Qty	Description
TL-001	1012417-0001	1	ASSEMBLY: TIE ROD, W/ BRGS
TL-002	0017-00101-2064	4	SCREW: M6 X 1 X 40, HEX HEAD, CAP
TL-003	0017-00104-0468	6	WASHER: M6.4 X 18 X 1.6, DIN, FLAT, G5, ZB
TL-004	1017736-0001	2	BUSHING: BEARING, TIMING LINK
TL-005	0017-00101-2150	4	SCREW: M8 X 1.25 6G6H X 20, UHS, HXW, CS, ST, ZB
TL-006	1013134-0001	2	BRACKET: LIFT GUARD
TL-007	0017-00103-0378	4	NUT: M6 X 1-6H6H, DIN, LOCKNUT, ST, BZ
TL-008	1003388-0001	4	NUT: M8 X 1.25-6H, DIN, UNF, HEX, LOCKNUT
TL-009	1017737-0001	2	BUSHING: BEARING, TIMING LINK

Upper Shrouds & Cup Holder

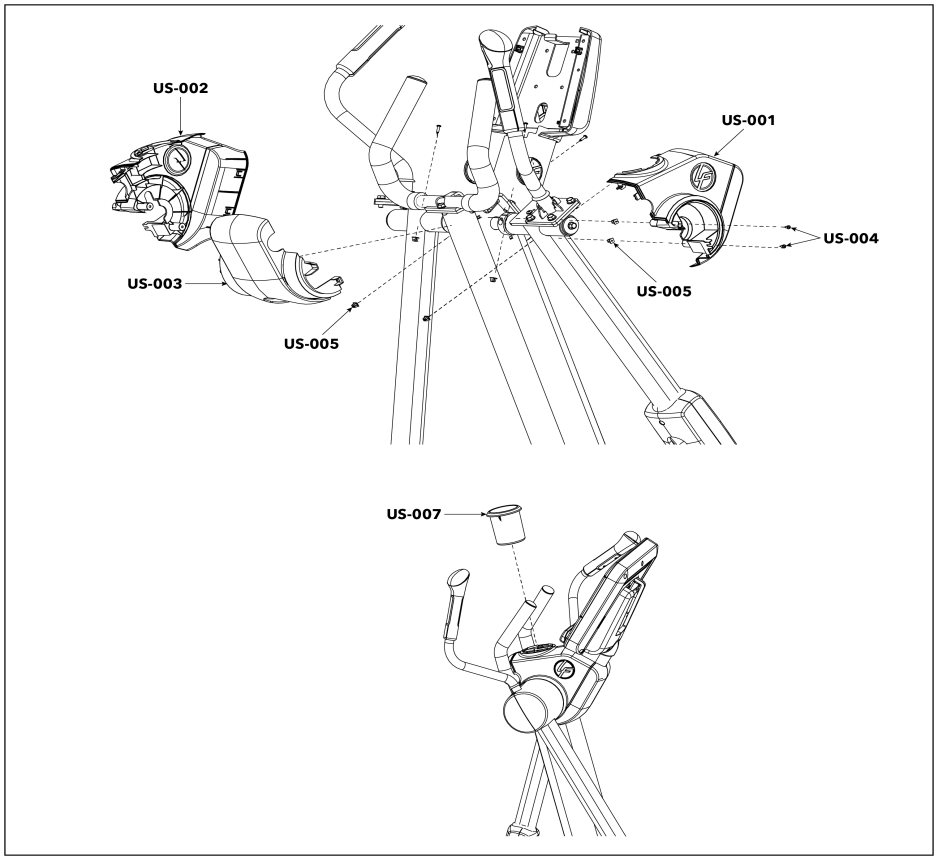

Ref #	Part Number	Qty	Description
US-001	1002575-2400	1	SHROUD: UPPER, RIGHT, CHARCOAL GRAY
US-002	1002576-2400	1	SHROUD: UPPER, LEFT, CHARCOAL GRAY
US-003	1002577-2400	1	SHROUD: UPPER, MIDDLE, CHARCOAL GRAY
US-004	0017-00101-1846	4	SCREW: M4.2 X 1.4-6G6G X 10, DIN, PHL, PAN, AB, ST, ZB
US-005	0017-00042-1147	12	GROMMET: SCREW, 8 OR 10
US-006	0017-00101-1796	8	SCREW: M4.2 X 0.7 6G6G X 19, DIN, PHL, PAN, AB, ST, ZB
US-007	1001034-2400	1	CUPHOLDER: LOCKING, CHARCOAL GRAY

Wiring Diagram - Integrity Base with Integrity SL and Discover SE4 Consoles

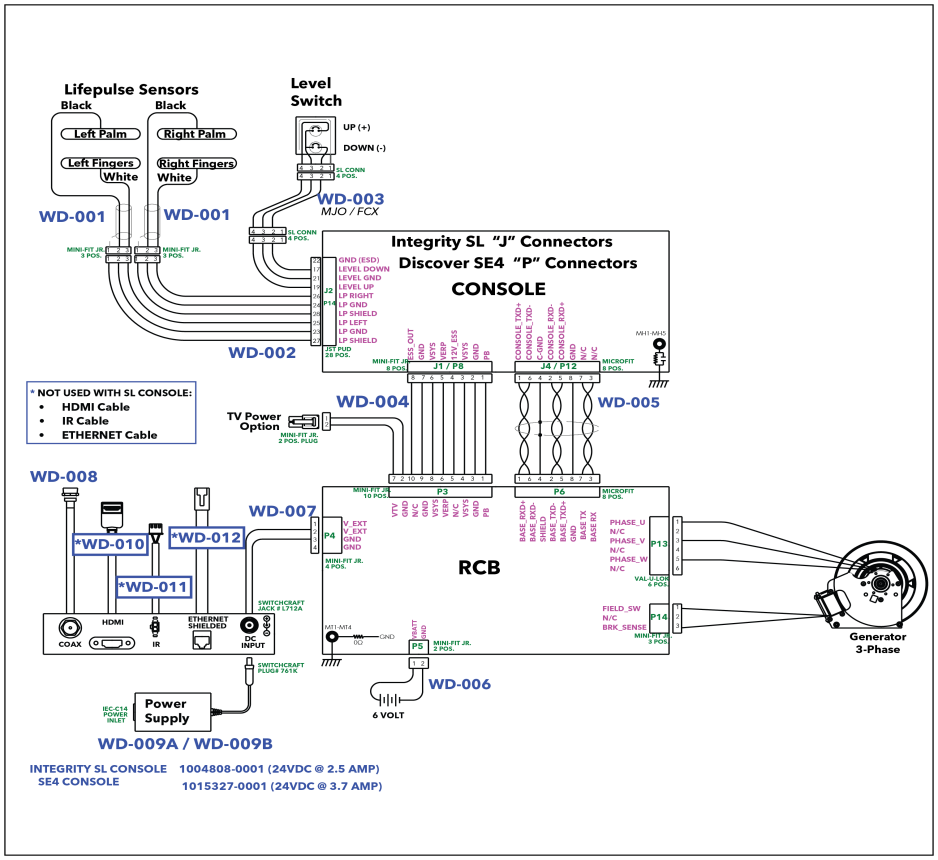

Ref #	Part Number	Qty	Description
WD-001	1003871-0002	2	CABLE: LIFEPULSE ELECTRODES, 435MM
WD-002	1014604-0000	1	CABLE: MCFLY CROSSTRAINER, BASE INTERFACE
WD-003	1004559-0001	1	CABLE: KEYPAD EXTENSION
WD-004	1015794-0003	1	CABLE: MCFLY CROSSTRAINER, CONSOLE TO BASE, POWER
WD-005	1002239-0003	1	CABLE: CONSOLE TO BASE, SIGNAL, 3625MM
WD-006	AK69-00106-0000	1	CABLE ASSY: BATTERY, NON-TREADS, 26 INCH
WD-007	1003521-0003	1	CABLE: POWER, RCB TO PANEL, 5A, CROSSTRAINER
WD-008	AK65-00062-0000	1	CABLE ASSY: COAX, RG6
WD-009B	1015327-0001	1	POWER SUPPLY: 24VDC, 3.75A
WD-009A	1004808-0001	1	POWER SUPPLY: INPUT 100-240VAC, OUTPUT 24VDC 2.5A, 2.5MM PLUG
WD-010	1001653-0003	1	CABLE ASSY: HDMI, PANEL MOUNT, RIGHT, 1700MM
WD-011	1001671-0003	1	CABLE: IR, CONSOLE TO PANEL, 1700MM
WD-012	AK70-00092-0000	1	CABLE ASSY: CAT5E, V2, 84 INCH