INT TREAD SMP SL BLK HIGH VT BASE

INT-SSL-BLKHM-11

Parts Manual

2/5/2024 23:09:33 PM

LifeFitness
WHAT WE LIVE FOR

Table of Contents

A Legend Description....3
Base Frame Electronics....4
Bridge Shrouds....6
Bridge, Upright, and Grounding Braid Cables....7
Bullhorns....9
Console Rear Shrouds....11
Deck, Rails, and End Caps....12
Drive Motor, Pulley, and Rollers....15
Lift Frame, Leg Levelers, and Wheels (HHT, CHT, TIC, TIB)....16
Lift Frame, Leg Levelers, and Wheels (PHM)....18
Lower Base Wiring Diagram....19
Power Cords....21
Service Wheel (HHT and TIB)....22
Upper Base with Integrity SL and Discover SE4 Consoles Wiring....23

** Upholstery & Frame Colors are listed at the end of the Parts Manual **

A Legend Description

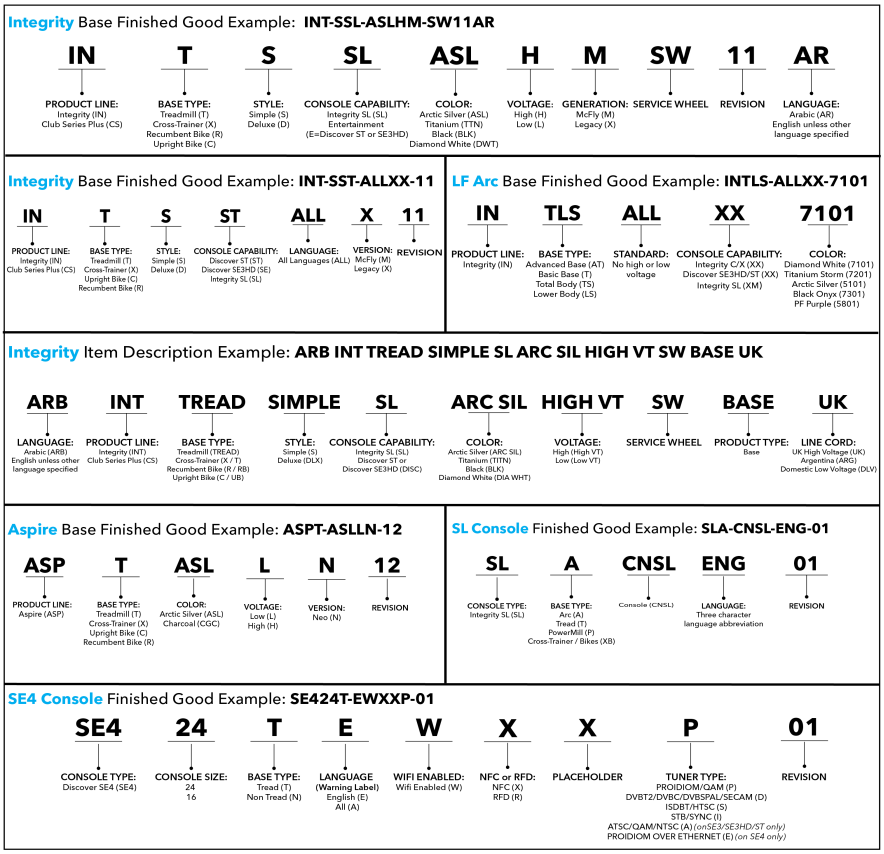

Ref #	Part Number	Qty	Description
-	LEGEND_DESCRIPTION	1	LEGEND DESCRIPTION

** Upholstery and Frame Colors are list at the end of the Parts Manual **

Base Frame Electronics

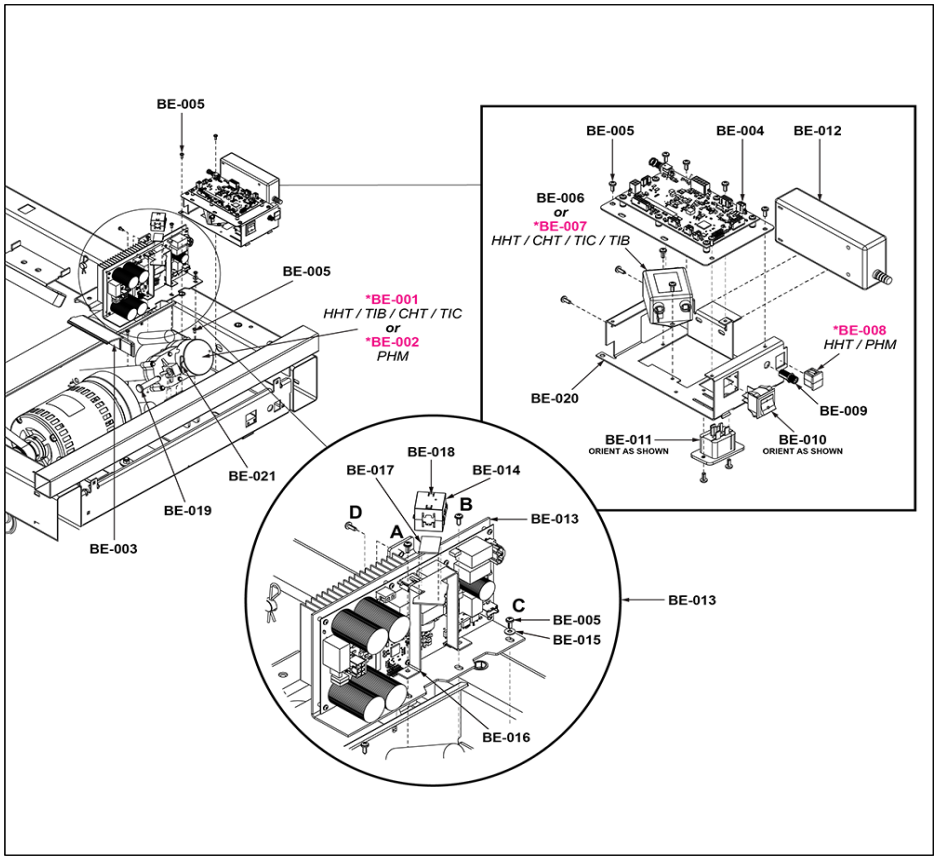

Ref #	Part Number	Qty	Description
BE-001	1001013-0002	1	ACTUATOR: LINEAR, 230V
BE-001	1001013-0001	1	ACTUATOR: LINEAR, 115V
BE-002	1001013-0004	1	ACTUATOR: LINEAR, 230V
BE-002	1001013-0003	1	ACTUATOR: LINEAR, 115V
BE-003	1003261-0001	1	COVER: ACTUATOR, TOP
BE-004	1004381-0002	1	NC ASSEMBLY: SIB PCB ASSY, MCFLY
BE-005	0017-00101-1968	20	SCREW: M4 X 0.7 X 10, PHL, PAN, TT, ST, ZS
BE-006	0017-00003-1015	1	FILTER: LINE, 20A, 250VAC
BE-007	0017-00003-0898	1	FILTER: LINE, 10A
BE-008	1004601-0001	1	PLUG: RJ45 RECEPTACLE
BE-009	0017-00021-2846	1	CONNECTOR: COAX, PANEL MOUNT
BE-010	0017-00032-0198	1	SWITCH: POWER, DPST ROCKER
BE-011	0017-00003-0949	1	RECEPTACLE: IEC, SIDE, FLANGE
BE-012	1004808-0001	1	POWER SUPPLY: INPUT 100-240VAC, OUTPUT 24VDC 2.5A, 2.5MM PLUG
BE-013	1003844-0001	1	NC ASSEMBLY: MDB, PC BOARD ASSY, TREADMILL
BE-014	121E-00001-0010	1	FERRITE-BEAD: SUPPRESSION B
BE-015	1005472-0001	3	WASHER: M4.4 X 11 X 1, ST, ZN
BE-016	1006254-0001	1	BRACKET: FERRITE CORE
BE-017	0017-00081-0346	1	TAPE: ADHESIVE, DOUBLE-SIDED
BE-018	0017-00042-1082	1	CABLE-TIE: L=15-5/16 IN. S/C#09-B
BE-019	1012811-0001	1	PIN: M12, CLEVIS

Ref #	Part Number	Qty	Description
BE-020	1003724-0001	1	BRACKET: ELECTRICAL MTG.
BE-021	1004469-0001	1	PIN: M10 X 50, COTTER

** Upholstery and Frame Colors are list at the end of the Parts Manual **

Bridge Shrouds

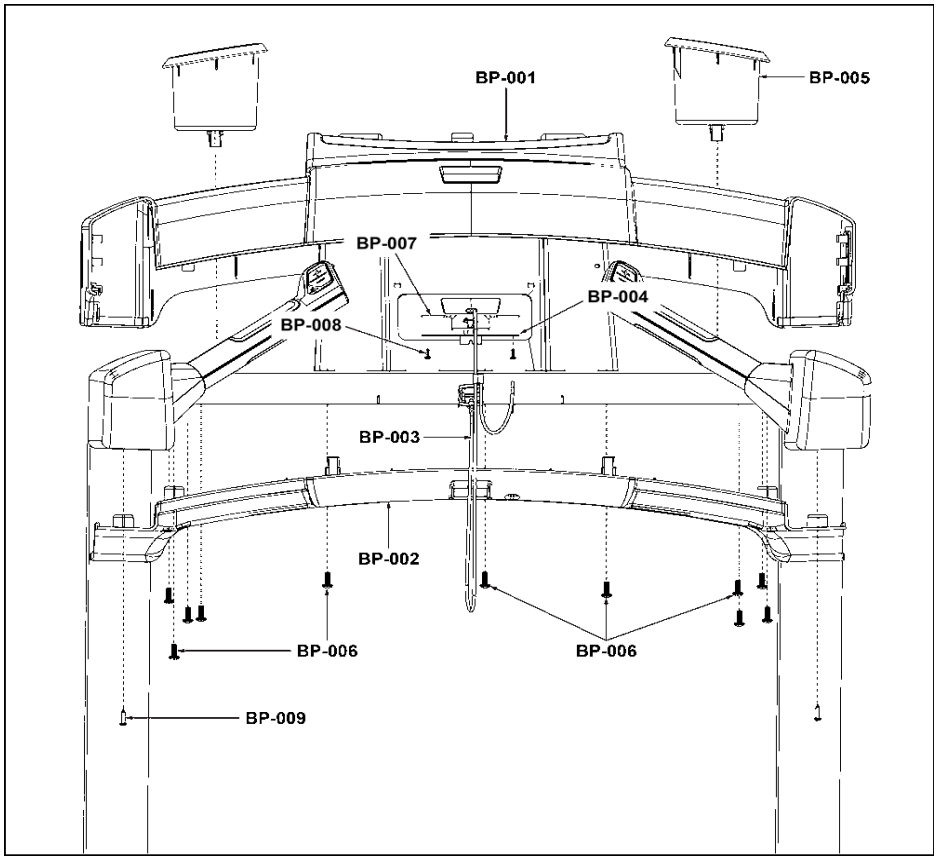

Ref #	Part Number	Qty	Description
BP-001,BP-002	1009938-0001	2	ASSEMBLY: MIDDLE SHROUDS
BP-003	1002224-0000	1	ASSEMBLY: TETHER, ASSEMBLY
BP-004	1002228-0001	1	PLATE: TETHER, PLATE
BP-005	1001740-2400	2	SHROUD: CUP HOLDER, CHARCOAL GRAY
BP-006	0017-00101-2138	13	SCREW: M6 X 1.0 X 16, DIN, PHL, PAN, MS, ST, ZB
BP-007	1005621-0001	1	BRACKET: REED SWITCH MOUNTING
BP-008	0017-00101-1650	2	SCREW: 6-19 X 6, PHL, PAN, PLT, ST, ZB, VMI
BP-009	0017-00101-1796	2	SCREW: M4.2 X 0.7 6G6G X 19, DIN, PHL, PAN, AB, ST, ZB

** Upholstery and Frame Colors are list at the end of the Parts Manual **

Bridge, Upright, and Grounding Braid Cables

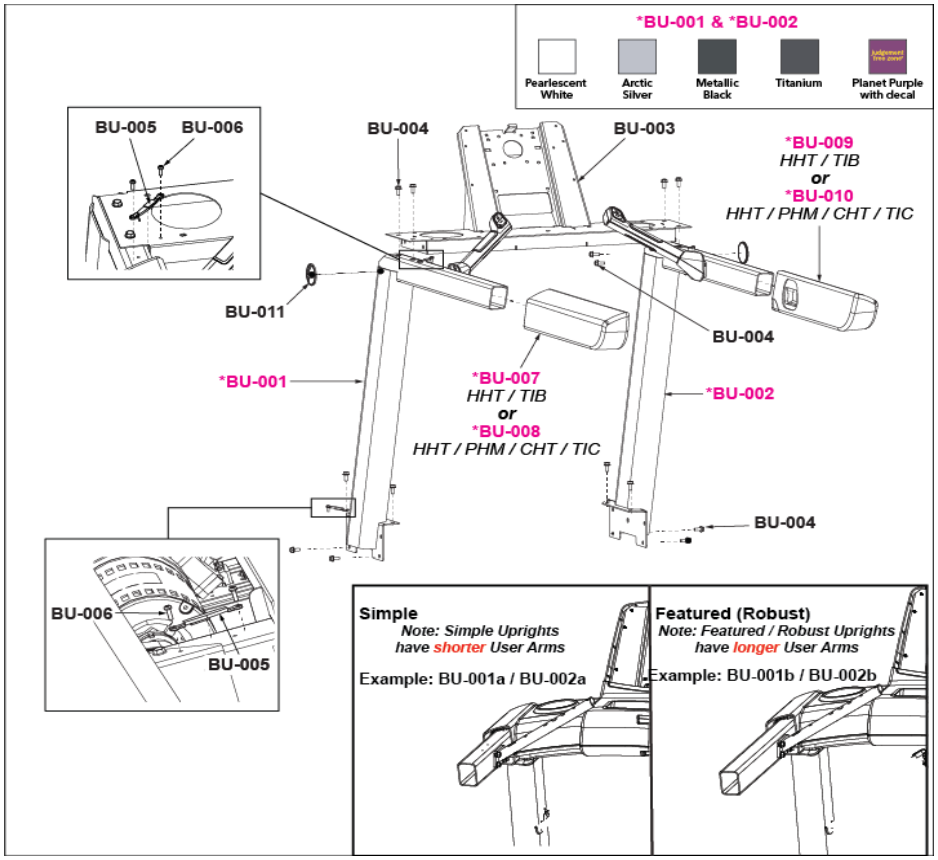

Ref #	Part Number	Qty	Description
BU-001c	1014190-0001	1	ASSEMBLY: UPRIGHT W/INSERT, LEFT, TITANIUM
BU-001b	1014188-0001	1	ASSEMBLY: UPRIGHT W/INSERT, LEFT, ARCTIC SILVER
BU-001e	1014189-0001	1	ASSEMBLY: UPRIGHT W/INSERT, LEFT, PEARLESCENT WHITE
BU-001a	1014192-0001	1	ASSEMBLY: UPRIGHT W/INSERTS; LEFT, ARCTIC SILVER
BU-001f	1012982-0001	1	ASSEMBLY: UPRIGHT W/DECAL, LEFT, PLANET
BU-001d	1014191-0001	1	ASSEMBLY: UPRIGHT W/INSERT, LEFT, METALLIC BLACK
BU-002a	1014194-0001	1	ASSEMBLY: UPRIGHT W/INSERTS; RIGHT, ARCTIC SILVER
BU-002d	1014187-0001	1	ASSEMBLY: UPRIGHT W/INSERT; RIGHT, METALLIC BLACK
BU-002e	1014185-0001	1	ASSEMBLY: UPRIGHT W/INSERT; RIGHT, PEARLESCENT WHITE
BU-002b	1014184-0001	1	ASSEMBLY: UPRIGHT W/INSERTS; RIGHT, ARCTIC SILVER
BU-002c	1014186-0001	1	ASSEMBLY: UPRIGHT W/INSERTS; RIGHT, TITANIUM
BU-002f	1012985-0001	1	ASSEMBLY: UPRIGHT W\DECAL, RIGHT, PLANET
BU-003	1001825-0000	1	WELDMENT: BRIDGE
BU-004	1005191-0001	16	SCREW: M8 X 1.25 6G6H X 20, UNS, HXW, CS, ST
BU-005	1006261-0001	4	CABLE: GROUNDING BRAID

Ref #	Part Number	Qty	Description
BU-006	0017-00101-1986	8	SCREW: M5 X 0.8-6G6G X 16, DIN, PAN, TT, ST, ZN
BU-007	1004665-0000	1	GRIP: LEFT, USER ARM, FOAM SIMPLE
BU-008	1001829-0000	1	GRIP: USER ARM, LEFT, FOAM, FEATURED
BU-009	1004666-0000	1	GRIP: RIGHT, USER ARM, FOAM SIMPLE 16.32 inch
BU-010	1001830-0000	1	GRIP: USER ARM, RIGHT, FOAM, FEATURED 22.5 INCH
BU-011	AK58-00245-2401	1	MEDALLION-ASSY: BUG, LIFE FITNESS, CHARCOAL GRAY

** Upholstery and Frame Colors are list at the end of the Parts Manual **

Bullhorns

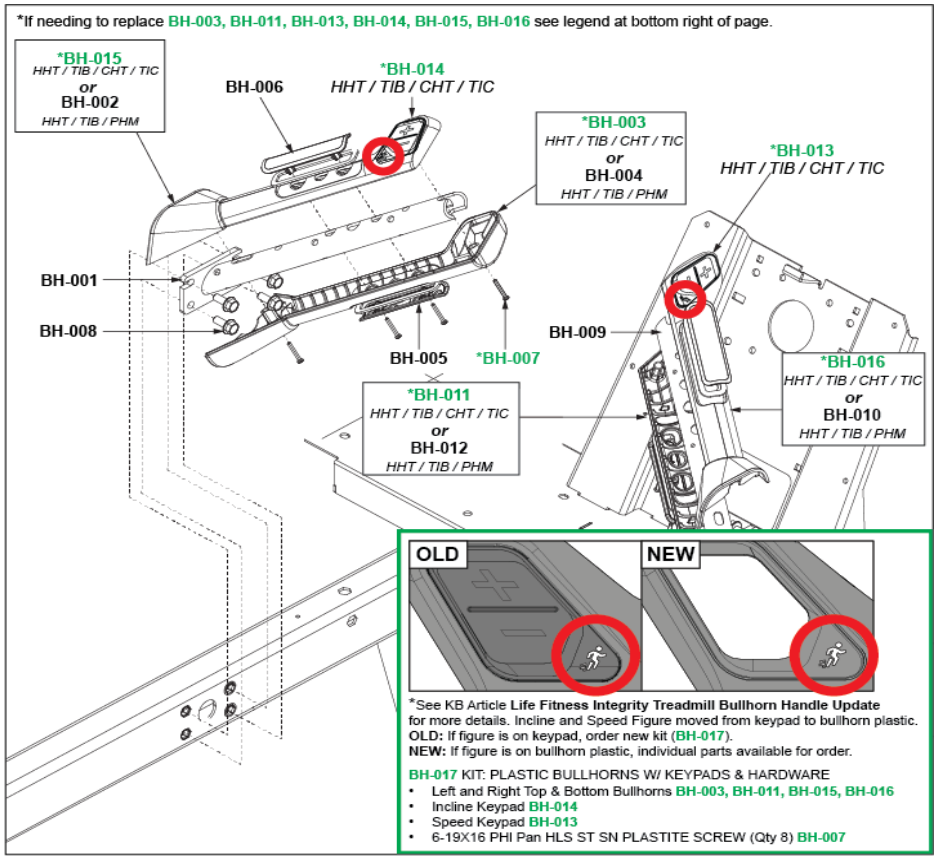

Ref #	Part Number	Qty	Description
BH-001	1001795-0001	1	WELDMENT: BULLHORN, LEFT
BH-002	1012066-0001	1	ASSEMBLY: BULLHORN SHROUD, TOP, LEFT, SIMPLE, CHARCOAL GRAY
BH-003	1022936-0001	1	ASSEMBLY: BULLHORN PLASTIC, BOTTOM, LEFT
BH-004	1012069-0001	1	ASSEMBLY: BULLHORN SHROUD, BOTTOM, LEFT, SIMPLE, CHARCOAL GRAY
BH-005	AK69-00140-2404	2	ELECTRODE: INSERT-MOLDED ASSY, 4 INCH, BOTTOM, CHARCOAL GRAY
BH-006	AK69-00139-2404	2	ELECTRODE: INSERT-MOLDED ASSY, 4 INCH, TOP, CHARCOAL GARY
BH-007	0017-00101-2054	8	SCREW: 6-19 X 16, PHL, PAN, HLS, ST, ZN
BH-008	1005191-0001	8	SCREW: M8 X 1.25 6G6H X 20, UNS, HXW, CS, ST
BH-009	1001798-0001	1	WELDMENT: BULLHORN; RIGHT
BH-010	1012068-0001	1	ASSEMBLY: BULLHORN SHROUD, TOP, RIGHT, SIMPLE, CHARCOAL GRAY
BH-011	1022940-0001	1	ASSEMBLY: BULLHORN PLASTIC, BOTTOM, RIGHT
BH-012	1012070-0001	1	ASSEMBLY: BULLHORN SHROUD, BOTTOM, RIGHT, SIMPLE, CHARCOAL GRAY
BH-013	1022092-0001	1	KEYPAD: SPEED
BH-014	1021924-0001	1	KEYPAD: INCLINE
BH-015	1022442-0001	1	ASSEMBLY: BULLHORN PLASTIC, TOP, LEFT
BH-016	1022451-0001	1	ASSEMBLY: BULLHORN PLASTIC, TOP, RIGHT

Ref #	Part Number	Qty	Description
BH-017	1023394-0001	1	KIT: PLASTIC BULLHORNS W/KEYPADS & HARDWARE; INTEGRITY

** Upholstery and Frame Colors are list at the end of the Parts Manual **

Console Rear Shrouds

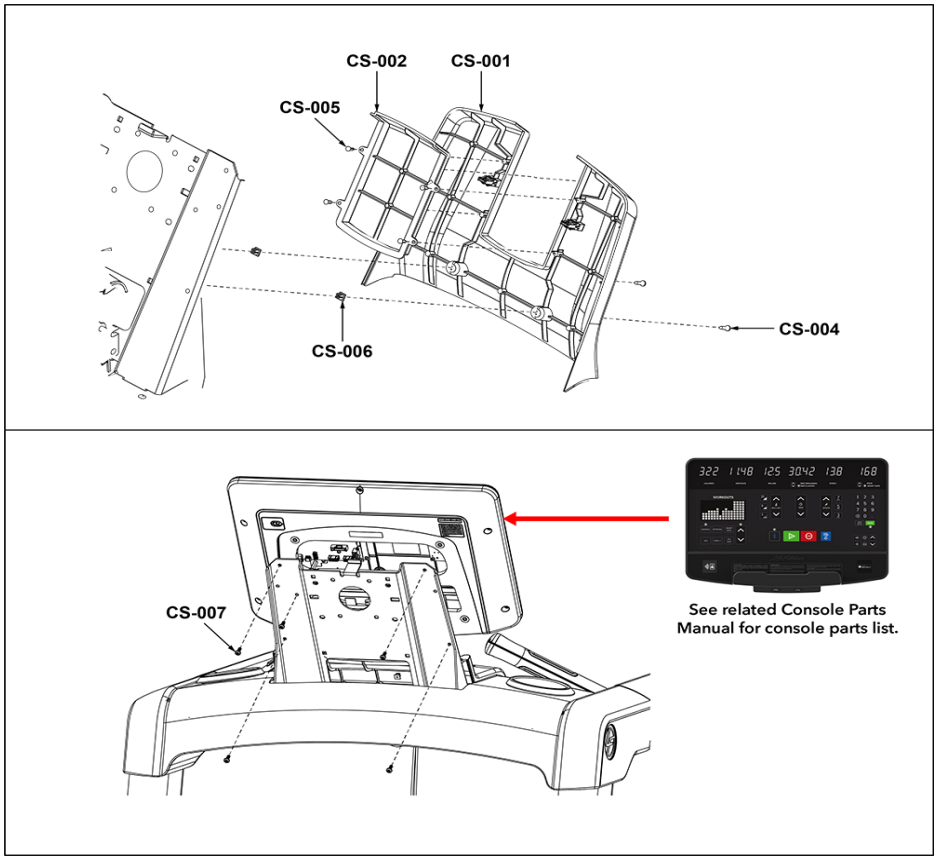

Ref #	Part Number	Qty	Description
CS-001	1001802-2400	1	SHROUD: CONSOLE, BACK, CHARCOAL GRAY
CS-002	1012986-0001	1	ASSEMBLY: SHROUD, CONSOLE BACK W/DECAL, PLANET
CS-004	0017-00101-1796	2	SCREW: M4.2 X 0.7 6G6G X 19, DIN, PHL, PAN, AB, ST, ZB
CS-005	0017-00101-1650	4	SCREW: 6-19 X 6, PHL, PAN, PLT, ST, ZB, VMI
CS-006	0017-00042-1147	2	GROMMET: SCREW, 8 OR 10
CS-007	0017-00101-1940	5	SCREW: M5 X 0.8 X 14, PHL, PAN, MS, ST, ZN

** Upholstery and Frame Colors are list at the end of the Parts Manual **

Deck, Rails, and End Caps

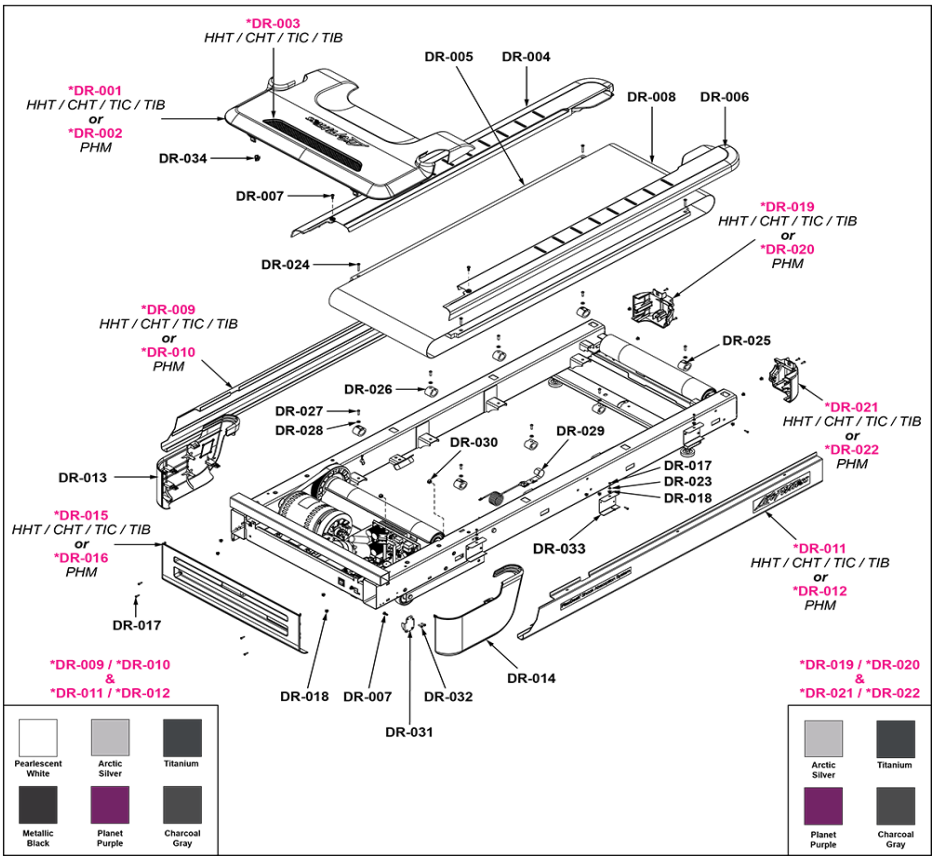

Ref #	Part Number	Qty	Description
DR-001	1001805-2400	1	SHROUD ASSY: MOTOR, TOP, CHARCOAL GRAY
DR-002	1012979-0001	1	ASSEMBLY: MOTOR SHROUD W/DECAL, TOP, PLANET
DR-003	1004595-0001	1	DECAL: SHROUD VENT
DR-004	1001924-2400	1	RAIL: TOP, USER, RIGHT, CHARCOAL GRAY
DR-005	1003817-0002	1	DECK: WALKING SURFACE, WITH WAX
DR-006	1001923-2400	1	RAIL: TOP, USER, LEFT, CHARCOAL GREY
DR-007	0017-00101-2138	4	SCREW: M6 X 1.0 X 16, DIN, PHL, PAN, MS, ST, ZB
DR-008	0K65-01002-0000	1	BELT: WALKING NP7131 21.5" WIDE
DR-009e	1012996-0001	1	ASSEMBLY: SIDE RAIL W/DECAL, USER, RIGHT, FEATURED, METALLIC BLACK
DR-009c	1012988-0001	1	ASSEMBLY: CHARCOAL GRAY SIDE RAIL W/DECAL, USER, RIGHT, SIMPLE
DR-009a	1012990-0001	1	ASSEMBLY: SIDE RAIL W/DECAL, USER, RIGHT, FEATURED, ARCTIC SILVER
DR-009b	1012994-0001	1	ASSEMBLY: SIDE RAIL W/DECAL, USER, RIGHT, FEATURED, TITANIUM
DR-009d	1012992-0001	1	ASSEMBLY: SIDE RAIL W/DECAL, USER, RIGHT, FEATURED, PEARL WHITE
DR-010	1012981-0001	1	ASSEMBLY: SIDE RAIL W/DECAL, USER, RIGHT, PLANET
DR-011a	1012989-0001	1	ASSEMBLY: SIDE RAIL W/DECAL, USER, LEFT, FEATURED, ARCTIC SILVER

Ref #	Part Number	Qty	Description
DR-011c	1012987-0001	1	ASSEMBLY: CHARCOAL GRAY SIDE RAIL W/DECAL, USER, LEFT, SIMPLE
DR-011b	1012993-0001	1	ASSEMBLY: SIDE RAIL, USER, LEFT, FEATURED, TITANIUM
DR-011e	1012995-0001	1	ASSEMBLY: SIDE RAIL W/DECAL, USER, LEFT, FEATURED, METALLIC BLACK
DR-011d	1012991-0001	1	ASSEMBLY: SIDE RAIL W\DECAL, USER, LEFT, FEATURED, PEARL WHITE
DR-012	1012980-0001	1	ASSEMBLY: SIDE W/DECAL, USER, LEFT, PLANET
DR-013	1001807-2400	1	SHROUD ASSY: MOTOR, RIGHT, CHARCOAL GRAY
DR-014	1001808-2400	1	SHROUD ASSY: MOTOR, LEFT, CHARCOAL GRAY
DR-015	1001806-2400	1	SHROUD: MOTOR, FRONT, CHARCOAL GRAY
DR-016	1009217-0001	1	SHROUD ASSY: FRONT MOTOR SHROUD WITH BUMPERS
DR-017	0017-00101-1796	28	SCREW: M4.2 X 0.7 6G6G X 19, DIN, PHL, PAN, AB, ST, ZB
DR-018	0017-00042-1147	28	GROMMET: SCREW, 8 OR 10
DR-019	1001928-2200	1	ENDCAP: USER, RIGHT, FEATURED, TITANIUM
DR-019	1001928-0100	1	ENDCAP: USER, RIGHT, FEATURED, ARCTIC SILVER
DR-019	1001927-2400	1	ENDCAP: USER, RIGHT, SIMPLE, CHARCOAL GRAY
DR-020	1001928-0800	1	ENDCAP: USER, RIGHT, FEATURED, PURPLE
DR-021	1001926-2200	1	ENDCAP: USER LEFT, FEATURED, TITANIUM
DR-021	1001925-2400	1	ENDCAP: USER, LEFT, SIMPLE, CHARCOAL GRAY
DR-021	1001926-0100	1	ENDCAP: USER, LEFT, FEATURED, ARCTIC SILVER
DR-022	1001926-0800	1	ENDCAP: USER, LEFT, FEATURED, PURPLE
DR-023	1005472-0001	6	WASHER: M4.4 X 11 X 1, ST, ZN
DR-024	1000722-0001	4	SCREW: M6 X 1.0 X 35, FSHCS
DR-025	1001124-0001	4	NUT: U-CLIP, M6
DR-026	0K40-01026-0002	8	SPRING: TECSPAK, BLACK S/C-B
DR-027	1005212-0001	8	SCREW: M6 X 1 X 20, HEX, BUT, CS, ST, ZB
DR-028	0017-00104-0072	8	WASHER: 0.255 X 0.562 X 0.046, FLAT, ST, ZN
DR-029	AK58-00560-0000	1	SENSOR: STRIDE ASSEMBLY, UNIT
DR-030	0017-00042-0869	2	BUSHING: HOLE, PASS-THROUGH
DR-031	1010591-0001	2	BRACKET: SIDE SHROUD SUPPORT
DR-032	0017-00101-1986	4	SCREW: M5 X 0.8-6G6G X 16, DIN, PAN, TT, ST, ZN
DR-033	1018019-0001	6	BRACKET: SHROUD MTG
DR-034	1002263-0001	4	CLIP: M9.55 X 16.5, FASTENER, SPRING
DR-035e	1023251-0002	1	ASSEMBLY: SIDE RAIL W/DECAL, RIGHT, FEATURED, METALLIC BLACK
DR-035d	1023249-0002	1	ASSEMBLY: SIDE RAIL W/DECAL, RIGHT, PEARLESCENT WHITE
DR-035a	1023248-0002	1	ASSEMBLY: SIDE RAIL W/DECAL, RIGHT, FEATURED, ARCTIC SILVER
DR-035c	1023252-0002	1	ASSEMBLY: SIDE RAIL W/DECAL, RIGHT, FEATURED, CHARCOAL GRAY
DR-035b	1023250-0002	1	ASSEMBLY: SIDE RAIL W/DECAL, RIGHT, FEATURED, TITANIUM
DR-036	1022105-0001	1	ASSEMBLY: PLASTIC SIDE RAIL W/DECAL, RIGHT, PLANET
DR-037e	1023251-0001	1	ASSEMBLY: SIDE RAIL W/DECAL, LEFT, FEATURED, METALLIC BLACK
DR-037c	1023252-0001	1	ASSEMBLY: SIDE RAIL W/DECAL, LEFT, FEATURED, CHARCOAL GRAY
DR-037d	1023249-0001	1	ASSEMBLY: SIDE RAIL W/DECAL, LEFT, FEATURED, PEARLESCENT WHITE
DR-037a	1023248-0001	1	ASSEMBLY: SIDE RAIL W/DECAL, LEFT, FEATURED, ARCTIC SILVER
DR-037b	1023250-0001	1	ASSEMBLY: SIDE RAIL W/DECAL, LEFT, FEATURED,

Ref #	Part Number	Qty	Description
			TITANIUM
DR-038	1022107-0001	1	ASSEMBLY: PLASTIC SIDE RAIL W/DECAL, LEFT, PLANET

** Upholstery and Frame Colors are list at the end of the Parts Manual **

Drive Motor, Pulley, and Rollers

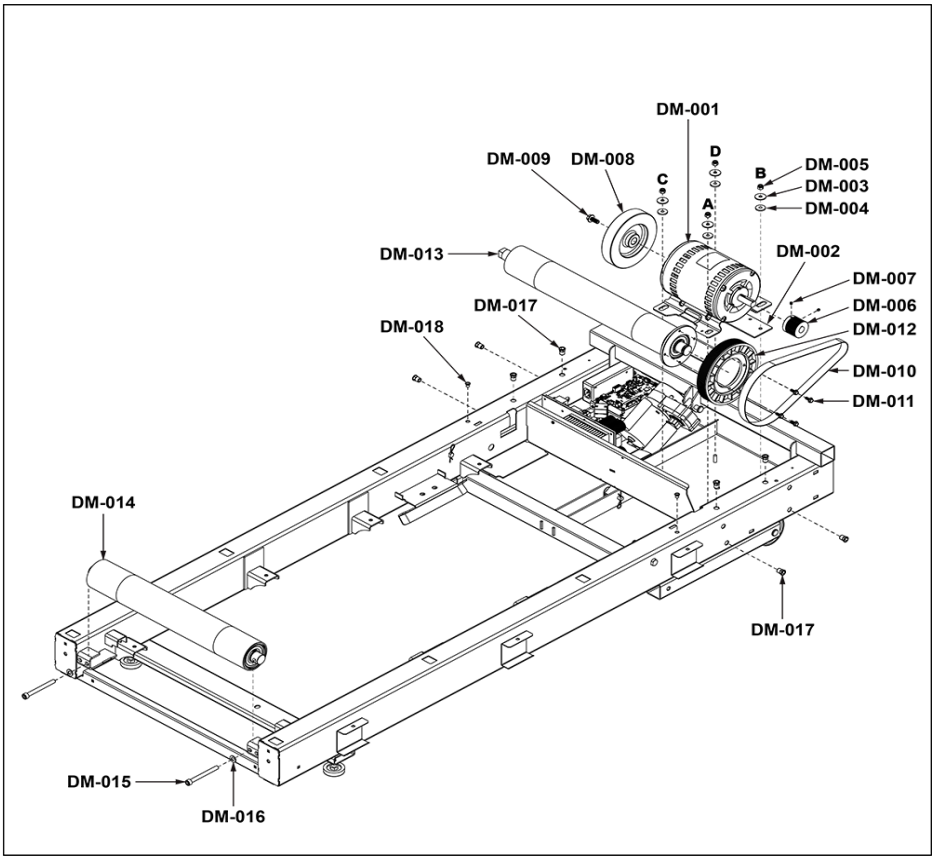

Ref #	Part Number	Qty	Description
DM-001	1002167-0000	1	MOTOR: AC, 4HP, INDUCTION
DM-002	0K58-01256-0001	2	PAD: INSULATING
DM-003	0017-00104-0409	4	WASHER: 0.327 X 1.125 X 0.090, FL, D, ST, BZ
DM-004	0K58-01255-0000	4	WASHER: INSULATING
DM-005	0017-00103-0333	4	NUT: M8 X 1.25-6H6H, DIN, LOCKING, ST, ZN
DM-006	1021771-0001	1	PULLEY: DRIVE
DM-007	1009209-0001	2	SCREW: M6 X 1 X 8, CUP POINT, SET SCREW
DM-008	0K65-01221-0000	1	FLYWHEEL:CAST IRON; WITH INTEGRAL FAN
DM-009	1005547-0001	1	SCREW: M10 X 1.50 6G6H X 25, UNS, FLG, CS, ST, ZB, W/PATCH
DM-010	1004417-0001	1	BELT: DRIVE
DM-011	1005249-0001	4	SCREW: M6 X 1 X 16, DIN, UNS, HXW, SERRATED, CS, ST, ZB
DM-012	1002171-0001	1	PULLEY: ROLLER
DM-013	1000841-0002	1	ROLLER: FRONT, 3.5" DIA
DM-014	1001382-0002	1	ROLLER: REAR, 3.5" DIA
DM-015	1009113-0001	2	SCREW: M10 X 1.5 X 80, SHCS
DM-016	0017-00104-0470	2	WASHER: M10.5 X 20 X 2, DIN, DFLAT, ST, ZB
DM-017	0017-00009-1191	1	INSERT: M8 X 6.6, THREADED, HEX
DM-018	0017-00009-1259	1	INSERT: M6 X 5, THREADED, HEX

** Upholstery and Frame Colors are list at the end of the Parts Manual **

Lift Frame, Leg Levelers, and Wheels (HHT, CHT, TIC, TIB)

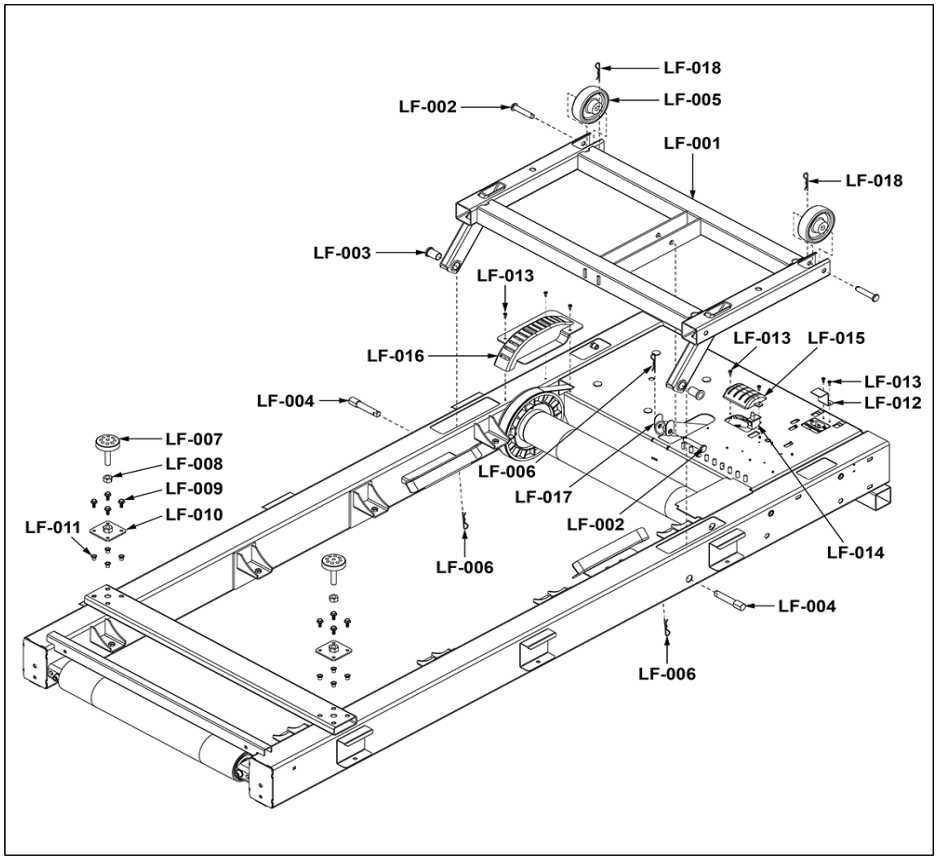

Ref #	Part Number	Qty	Description
LF-001	1000846-0700	1	FRAME: LIFT; PAINTED
LF-002	1002162-0001	3	PIN: M12 X 60, CLEVIS, ST
LF-003	1001396-0001	2	BEARING: FLG SLV
LF-004	1000840-0000	2	SHAFT: LIFT FRAME, PIVOT
LF-005	1001387-0001	2	WHEEL: LIFT FRAME
LF-006	1004469-0001	3	PIN: M10 X 50, COTTER
LF-007	1001956-0001	2	LEVELER: BASE FRAME
LF-008	1003534-0001	2	NUT: M12 X 1.75, HEX
LF-009	1005249-0001	8	SCREW: M6 X 1 X 16, DIN, UNS, HXW, SERRATED, CS, ST, ZB
LF-010	1002793-0001	2	PLATE: LEVELER MTG.
LF-011	0017-00009-1259	8	INSERT: M6 X 5, THREADED, HEX
LF-012	1004354-0001	1	BRACKET: CABLE SUPPORT
LF-013	0017-00101-1968	7	SCREW: M4 X 0.7 X 10, PHL, PAN, TT, ST, ZS
LF-014	0017-00032-0195	1	SWITCH: MOMENTARY ACTION
LF-015	1003252-0001	1	COVER: ACTUATOR, BOTTOM
LF-016	1002721-0001	1	COVER: PULLEY, ROLLER
LF-017	1001392-0001	2	WASHER: EZ GRIP
LF-018	HP016820	2	COTTER PIN .125 X 1.25

Lift Frame, Leg Levelers, and Wheels (PHM)

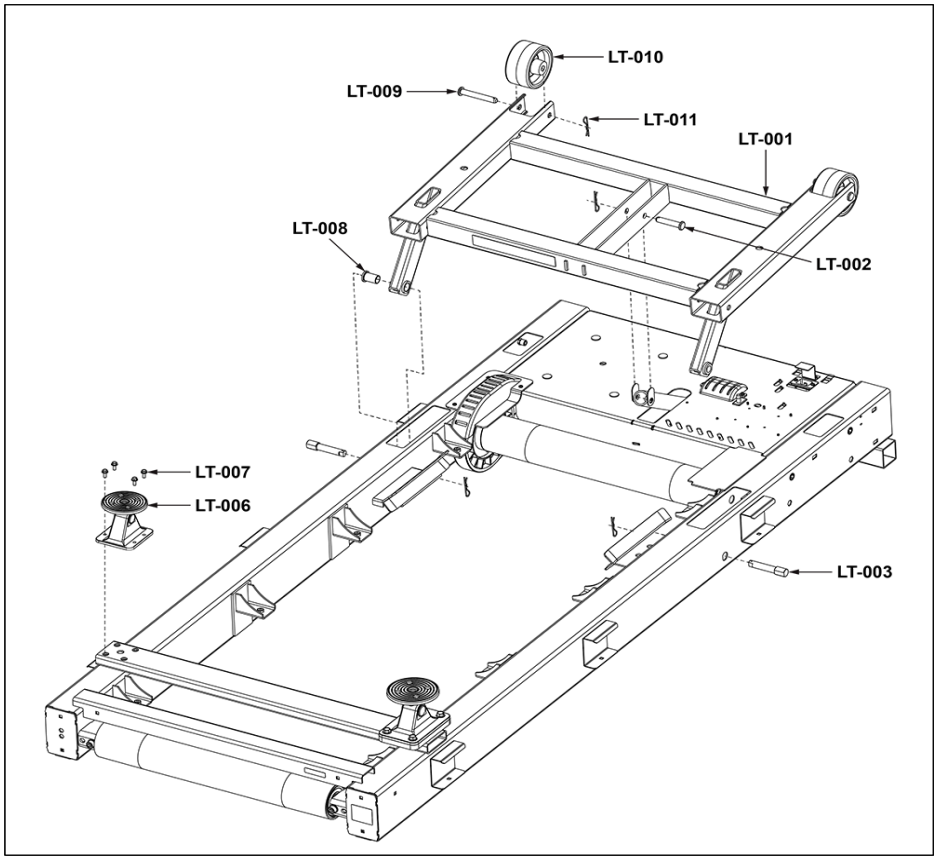

Ref #	Part Number	Qty	Description
LT-001	1008251-0001	1	FRAME: LIFT, PLANET UNPAINTED
LT-002	1002162-0001	1	PIN: M12 X 60, CLEVIS, ST
LT-003	1000840-0000	2	SHAFT: LIFT FRAME, PIVOT
LT-006	1010930-0001	2	ASSEMBLY: PLANET FITNESS, LEG, LEVELER
LT-007	1005249-0001	8	SCREW: M6 X 1 X 16, DIN, UNS, HXW, SERRATED, CS, ST, ZB
LT-008	1001396-0001	2	BEARING: FLG SLV
LT-009	1008284-0001	2	PIN: M12, CLEVIS
LT-010	1008183-0001	2	WHEEL: LIFT
LT-011	1004469-0001	5	PIN: M10 X 50, COTTER

** Upholstery and Frame Colors are list at the end of the Parts Manual **

Lower Base Wiring Diagram

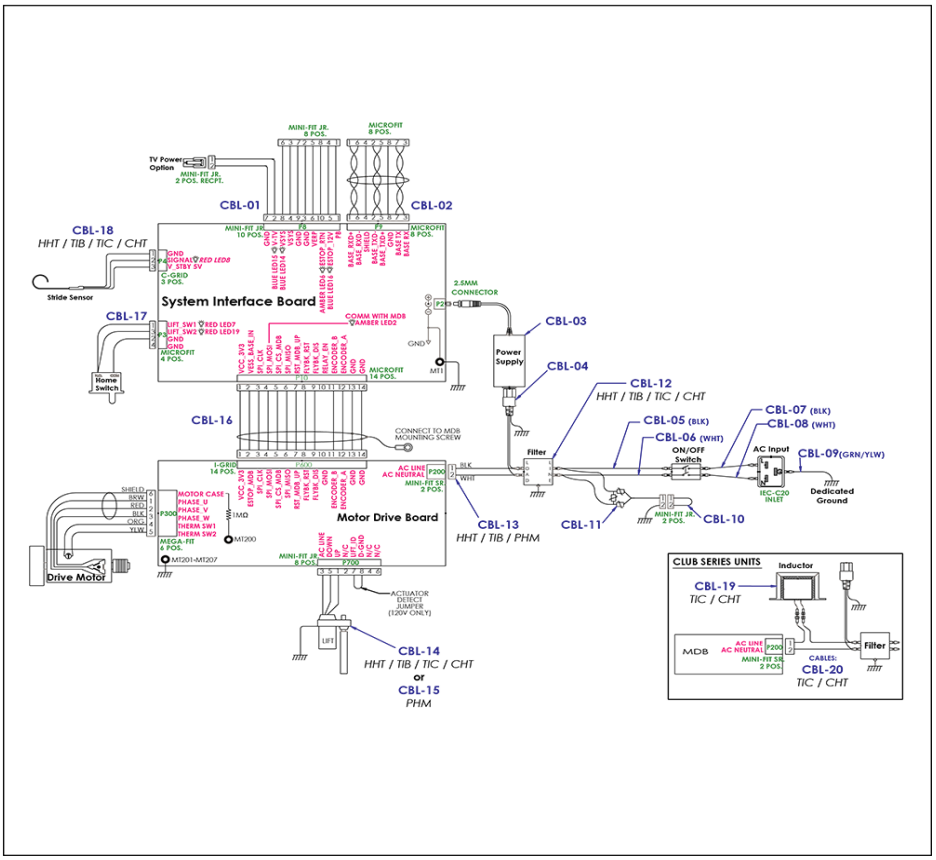

Ref #	Part Number	Qty	Description
CBL-01	1015794-0004	1	CABLE: MCFLY TREAD, CONSOLE TO BASE, POWER
CBL-02	1002239-0004	1	CABLE: CONSOLE TO BASE, SIGNAL, 2040MM
CBL-03	1011106-0001	1	POWER SUPPLY: 24VDC, 5A
CBL-03	1004808-0001	1	POWER SUPPLY: INPUT 100-240VAC, OUTPUT 24VDC 2.5A, 2.5MM PLUG
CBL-04	1004563-0001	1	CABLE: LINE FILTER TO POWER SUPPLY
CBL-05	1004044-0002	1	CABLE: SWITCH TO FILTER, BLACK
CBL-06	1004044-0001	1	CABLE: SWITCH TO FILTER, WHITE
CBL-07	1004046-0002	1	CABLE: POWER INPUT, BLACK, 125MM
CBL-08	1004046-0001	1	CABLE: POWER INPUT, WHITE, 125MM
CBL-09	1004201-0001	1	CABLE: GROUND
CBL-10	AK58-00263-0000	1	CABLE ASSY: HI-POT, JUMPER
CBL-11	AK58-00224-0001	1	CABLE ASSY: MOV, FILTER
CBL-12	1008383-0001	1	FILTER: LINE, 10A, HI-VOLT CONSUMER
CBL-12	0017-00003-1015	1	FILTER: LINE, 20A, 250VAC
CBL-13	1004045-0002	1	CABLE: POWER INPUT, 400 mm
CBL-14	1001013-0001	1	ACTUATOR: LINEAR, 115V
CBL-14	1001013-0002	1	ACTUATOR: LINEAR, 230V
CBL-15	1001013-0004	1	ACTUATOR: LINEAR, 230V
CBL-15	1001013-0003	1	ACTUATOR: LINEAR, 115V
CBL-16	1004243-0001	1	CABLE: SIB-MDB
CBL-17	AK58-00027-0000	1	CABLE ASSY: ZERO HOME SWITCH

Ref #	Part Number	Qty	Description
CBL-18	AK58-00560-0000	1	SENSOR: STRIDE ASSEMBLY, UNIT
CBL-19	111E-00001-0042	1	INDUCTOR: 15MH; 230V 2-SHTS-C
CBL-19	111E-00001-0041	1	INDUCTOR: 3MH, 120VAC, T9I
CBL-20	1006002-0001	1	CABLE ASSY: POWER, 230V, PCST
CBL-20	1006003-0001	1	CABLE ASSY: POWER, 120V, PCST

** Upholstery and Frame Colors are list at the end of the Parts Manual **

Power Cords

LC-001		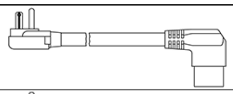	96", 244 cm
LC-002		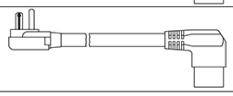	144", 366 cm
LC-003			96", 244 cm
LC-004		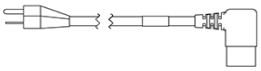	102", 260 cm
LC-005		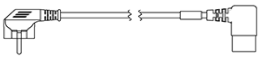	144", 366 cm
LC-006			144", 366 cm
LC-007		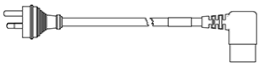	144", 366 cm
LC-008		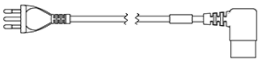	144", 366 cm
LC-009		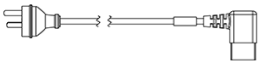	144", 366 cm
*LC-010 *CHT / TIC*		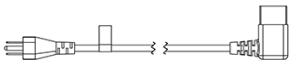	144", 366 cm

Ref #	Part Number	Qty	Description
LC-001	0017-00003-0978	1	LINE-CORD: R/A; NEMA 5-20 96" S/C-C
LC-002	0017-00003-0980	1	LINE-CORD: R/A; NEMA 5-20 144 IN. S/C-C
LC-003	0017-00003-0974	1	LINE-CORD: 96"; W/RECP S/C-C
LC-004	0017-00003-0781	1	LINE-CORD: R/A; 220V; USA D
LC-005	0017-00003-0696	1	LINE-CORD: R/A; CEE7; 103" 10A 250V D
LC-006	0017-00003-0890	1	LINE-CORD: U.K; R/A D
LC-007	0017-00003-0996	1	LINE-CORD: IEC; AUSTRALIAN; 230/50 C
LC-008	0017-00003-1054	1	LINE-CORD: BRAZIL, IEC-C19
LC-009	0017-00003-1068	1	LINE-CORD: ARGENTINA, IRAM 2073, IEC-C19
LC-010	0017-00003-1079	1	LINECORD NEMA 5-15P WITH R/A C-19 CONNECTOR

** Upholstery and Frame Colors are list at the end of the Parts Manual **

Service Wheel (HHT and TIB)

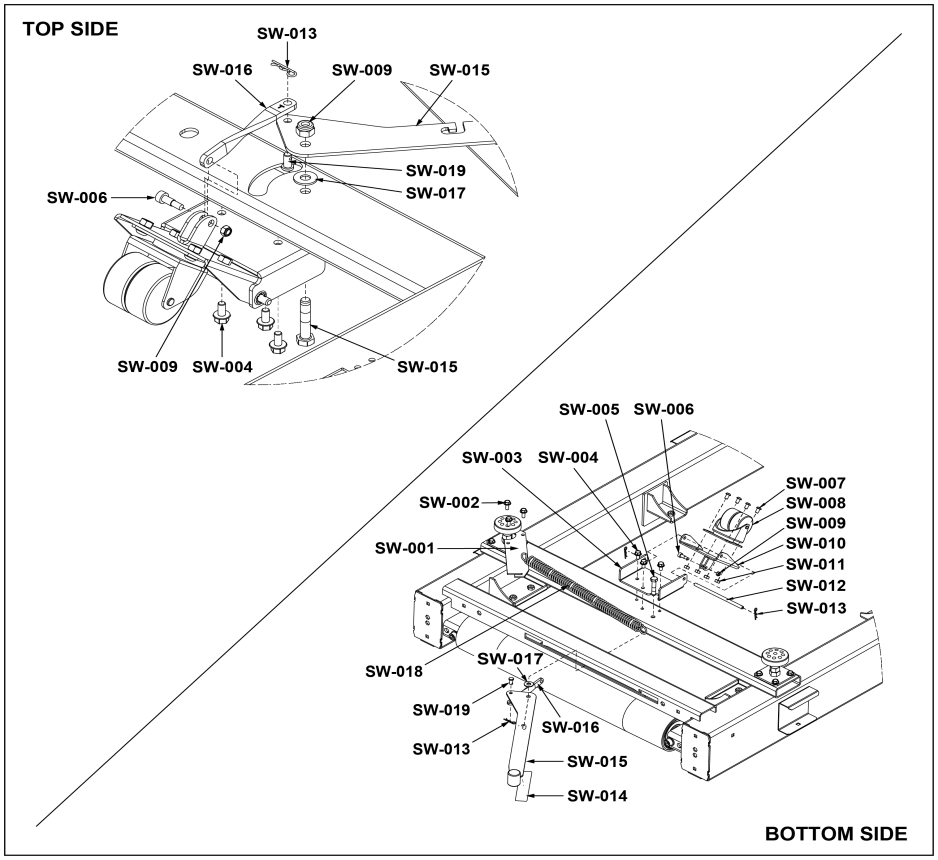

Ref #	Part Number	Qty	Description
SW-001	1008944-0001	1	BRACKET: SPRING
SW-002	1005249-0001	3	SCREW: M6 X 1 X 16, DIN, UNS, HXW, SERRATED, CS, ST, ZB
SW-003	1003600-0001	1	BRACKET: BOTTOM PIVOT, SERVICE WHEEL
SW-004	1009565-0001	3	BOLT: M6 X 1.0 X 12, TAPTITE
SW-005	0017-00101-1925	1	M8.0X1.25-6G6GX40. DIN UNS HEX MS ST ZN
SW-006	1006044-0001	1	SCREW: M5 X 0.8, 6MM DIA SHOULDER
SW-007	1006331-0001	4	SCREW: M6 X 1.0 X 10, HXS, BUT, CS, ST, BZ
SW-008	CW-25006	1	CASTOR: SWIVEL, SERVICE WHEEL
SW-009	1006046-0001	1	NUT: M5 NYLOCK
SW-010	1006042-0001	1	WELDMENT: WHEEL MOUNT
SW-011	0017-00103-0360	4	NUT: M6 X 1.0, HEX, ST, ZS
SW-012	1003609-0001	1	PIN: PIVOT, SERVICE WHEEL
SW-013	1010579-0001	3	PIN: M6 X 28.6, COTTER
SW-014	1009126-0001	1	DECAL: PROTECTIVE, LEVER
SW-015	1003598-0000	1	WELDMENT: LEVER, SERVICE WHEEL
SW-016	1003613-0001	1	LINK: TWIST,SERVICE WHEEL
SW-017	0017-00104-0510	1	WASHER: M8.4 X 19 X 1.6, DIN, FLAT, ST, ZB
SW-018	1009037-0001	1	SPRING: EXTENSION, 7.75 X 0.875 OD
SW-019	1010578-0001	1	PIN: M6.35 X 12.7, CLEVIS

** Upholstery and Frame Colors are list at the end of the Parts Manual **

Upper Base with Integrity SL and Discover SE4 Consoles Wiring

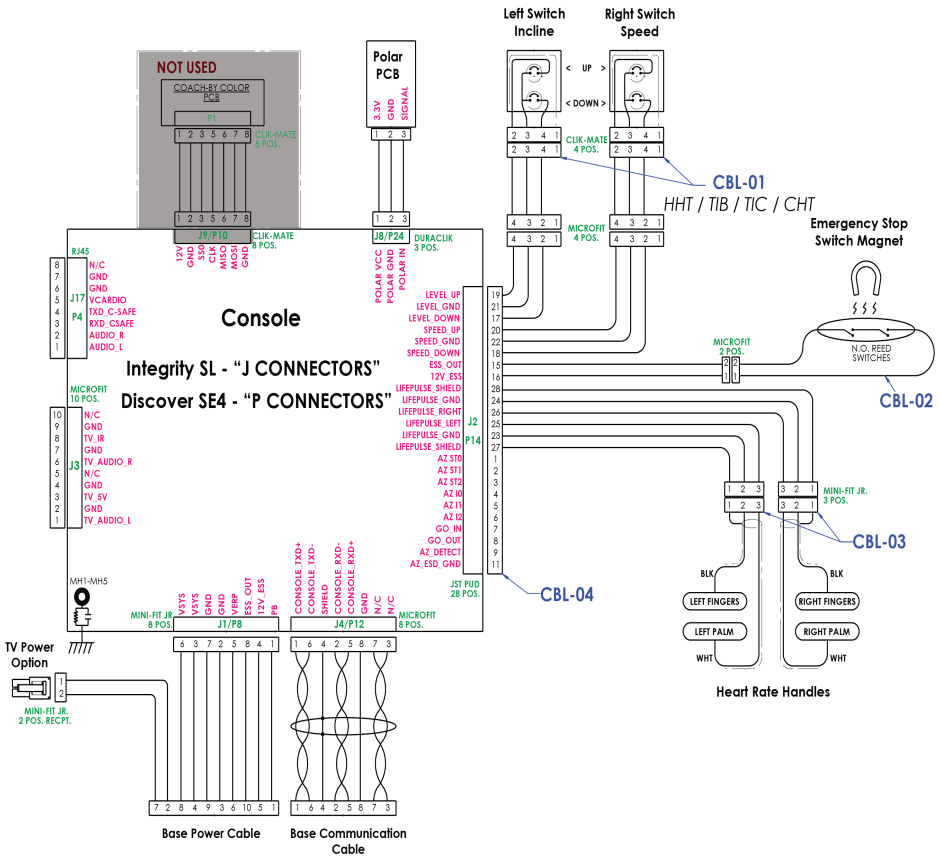

Ref #	Part Number	Qty	Description
CBL-01	1003835-0001	1	CABLE: KEYPAD, EXTENSION
CBL-02	AK58-00036-0000	1	CABLE ASSY: EMERGENCY STOP, SWITCH ASSY.
CBL-03	1003871-0001	1	CABLE: LIFEPULSE ELECTRODES, 795MM
CBL-04	1014575-0000	1	CABLE: MCFLY TREAD, BASE INTERFACE

** Upholstery and Frame Colors are list at the end of the Parts Manual **

Frame and Upholstery Color Chart

Base Finished Good Example: **INT-SSL-ASLHM-SW11AR**

IN — PRODUCT LINE: Integrity (IN), Club Series Plus (CS)

T — BASE TYPE: Treadmill (T), Cross-Trainer (X), Recumbent Bike (R), Upright Bike (C)

S — STYLE: Simple (S), Deluxe (D)

SL — CONSOLE CAPABILITY: Integrity SL (SL), Entertainment (E = Discover ST or SE3HD)

ASL — COLOR: Arctic Silver (ASL), Titanium (TTN), Black (BLK), Diamond White (DWT)

H — VOLTAGE: High (H), Low (L)

M — GENERATION: McFly (M), Legacy (X)

SW — SERVICE WHEEL

11 — REVISION

AR — LANGUAGE: Arabic (AR), English unless other language specified

Console Finished Good Example: **DST21-XWXXD-03**

DST — CONSOLE TYPE: Discover ST (DST), Discover SE3HD (DSEHD), Integrity SL (SL)

21 — SIZE (INCHES): Tread (21), Non-Tread (16)

S — PLACEHOLDER

W — WIFI ENABLED: Wifi Enabled (W)

X — NFC or RFD: NFC (X), RFD (R)

X — PLACEHOLDER

D — TUNER TYPE: DVBT2/DVBC/DVBSPAL/SECAM (D), ATSC/QAM/NTSC (A), PROIDIUM/QAM (P), ISDBT/HTSC (S), STB/SYNC (I)

3 — REVISION: Revision 03

Item Description Example: **ARB INT TREAD SIMPLE SL ARC SIL HIGH VT SW BASE UK**

ARB — LANGUAGE: Arabic (ARB), English unless other language specified

INT — PRODUCT LINE: Integrity (INT), Club Series Plus (CS)

TREAD — BASE TYPE: Treadmill (TREAD), Cross-Trainer (X / T), Recumbent Bike (R / RB), Upright Bike (C / UB)

SIMPLE — STYLE: Simple (S), Deluxe (DLX)

SL — CONSOLE CAPABILITY: Integrity SL (SL), Discover ST or Discover SE3HD (DISC)

ARC SIL — COLOR: Arctic Silver (ARC SIL), Titanium (TITN), Black (BLK), Diamond White (DIA WHT)

HIGH VT — VOLTAGE: High (High VT), Low (Low VT)

SW — SERVICE WHEEL

BASE — PRODUCT TYPE: Base

UK — LINE CORD: UK High Voltage (UK), Argentina (ARG), Domestic Low Voltage (DLV)

Model Description Example: **INT-SST-ALLXX-11**

IN — PRODUCT LINE: Integrity (IN), Club Series Plus (CS)

T — BASE TYPE: Treadmill (T), Cross-Trainer (X), Upright Bike (C), Recumbent Bike (R)

S — STYLE: Simple (S), Deluxe (D)

ST — CONSOLE CAPABILITY: Discover ST (ST), Discover SE3HD (SE), Integrity SL (SL)

ALL — LANGUAGE: All Languages (ALL)

X — VERSION: McFly (M), Legacy (X)

11 — REVISION: Revision 11