LIFECYCLE® GX GROUP CYCLE BIKE

GEC-ALLLX-01, GEC-ALLLX-02 and GEH-ALLXX-02

PARTS MANUAL

1/09/20



LifeFitness
WHAT WE LIVE FOR

Table of Contents

Console Assembly (CN) 3

Base Electronics (BE) 4

Cable Management (CM) 5

Drive System (DS)
- Drive Belt and Crankshaft Assembly 6
- Flywheel and Hub Assembly 7
- Idler Assembly 8

Handlebar Mechanism (HM) 9

Shrouds, Covers, and Gaskets (SC) 10

Stabilizer Assembly (SA) 11

Seat Mechanism (SM) 13

Wiring 15

Miscellaneous

Item	Alpha Code	Part Number	Description
MISC-001	GEB, GED, GEH	0017-00008-0204	Arctic Silver Touch-Up Paint: Aerosol Spray Can
MISC-002	GEB, GED, GEH	0017-00008-0205	Arctic Silver Touch-Up Paint: 0.5 Oz. Bottle w/Applicator

Console Assembly (CN)

Exploded View

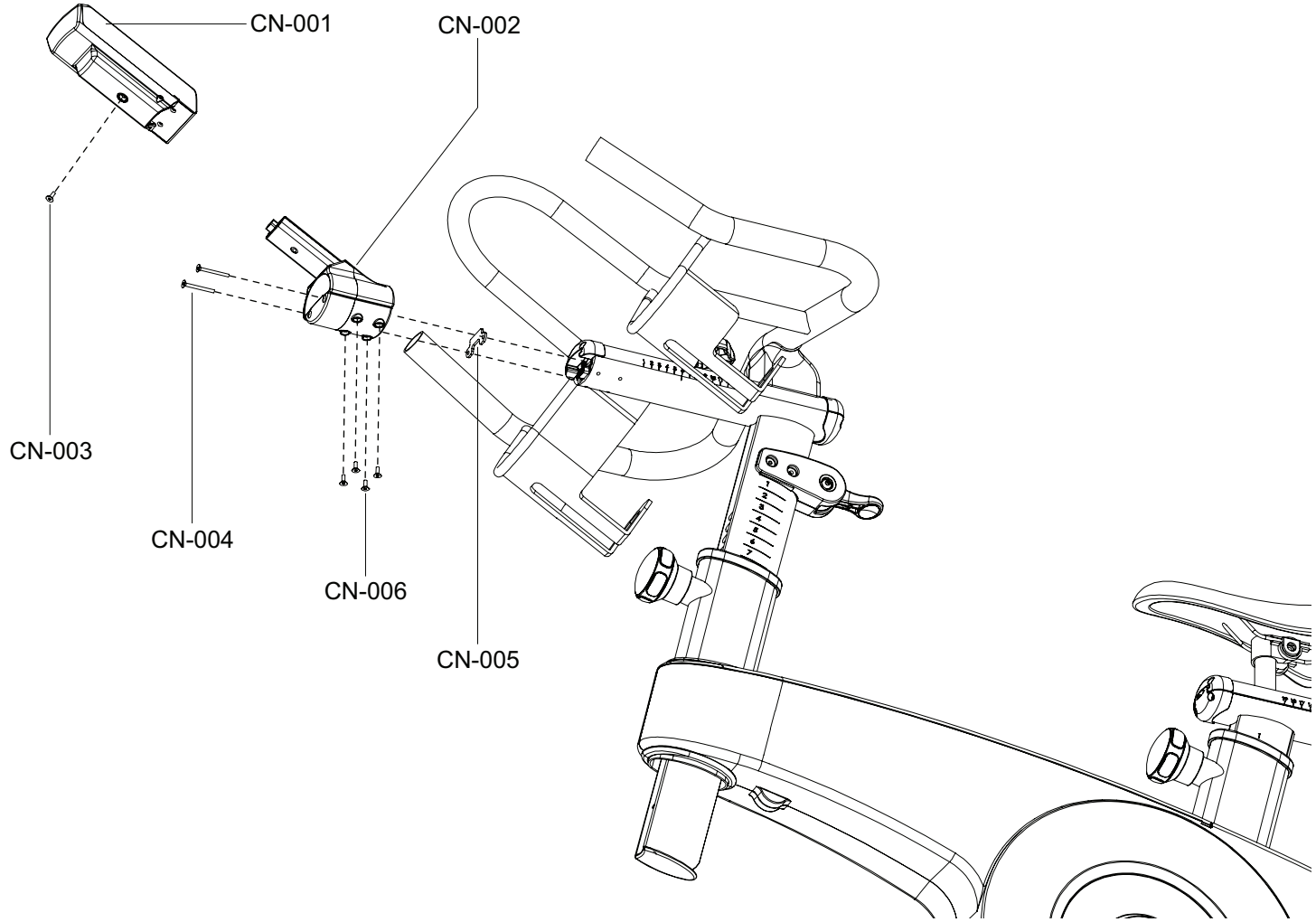

Parts List

Item	Alpha Code	Part Number	Description
CN-001	GEB, GED, GEE, GEH	GECLCD-ALLXX-02	Console Assembly (includes items with *)
CN-002	GEB, GED, GEE, GEH	9366101	Console Support Bracket *
CN-003	GEB, GED, GEE, GEH	9079401	Screw (1) *
CN-004	GEB, GED, GEE, GEH	9366201	Screw (2) *
CN-005	GEB, GED, GEH	9068402	Slide Limiter Plate SS
CN-006	GEB, GED, GEE, GEH	9366301	Screw (4)*

Base Electronics (BE)

Exploded View

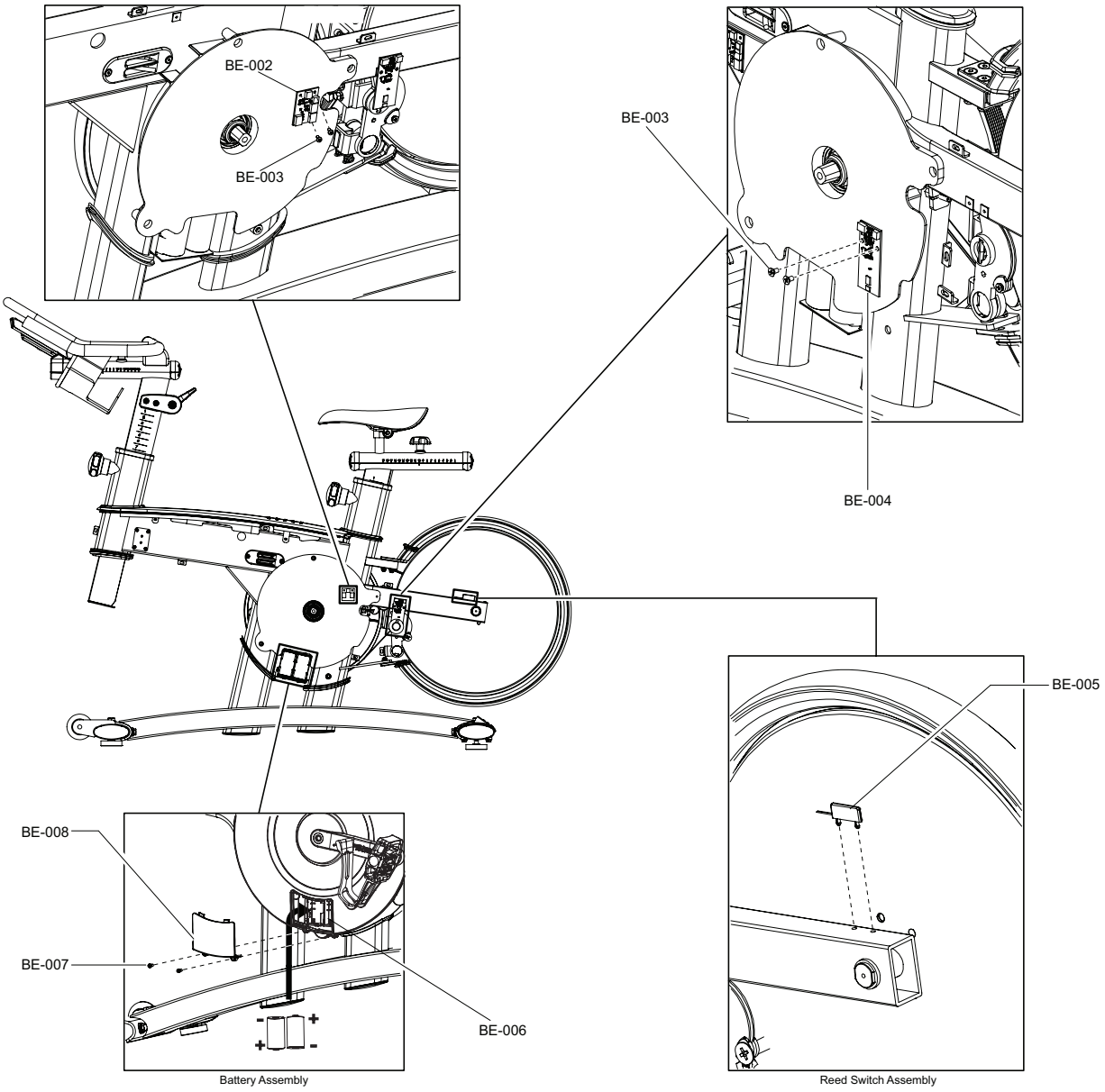

Parts List

Item	Alpha Code	Part Number	Description
BE-002**	GEB, GED, GEH	9479801	Junction Board
BE-003	GEB, GED, GEH	9094401	Screw (2)
BE-004	GEB, GED, GEH	9096801	PCB Sensor Board
BE-005	GEB, GED, GEH	9079501	Reed Switch Module Assembly
BE-006	GEB, GED, GEH	9096901	Battery Box *(includes wire)*
BE-007	GEB, GED, GEH	9095301	Screw (2)
BE-008	GEB, GED, GEH	9075202	Battery Cover V2

**When replacing junction board, also order CM-004 Cable Shield (9088902) and install together.

Cable Management (CM)

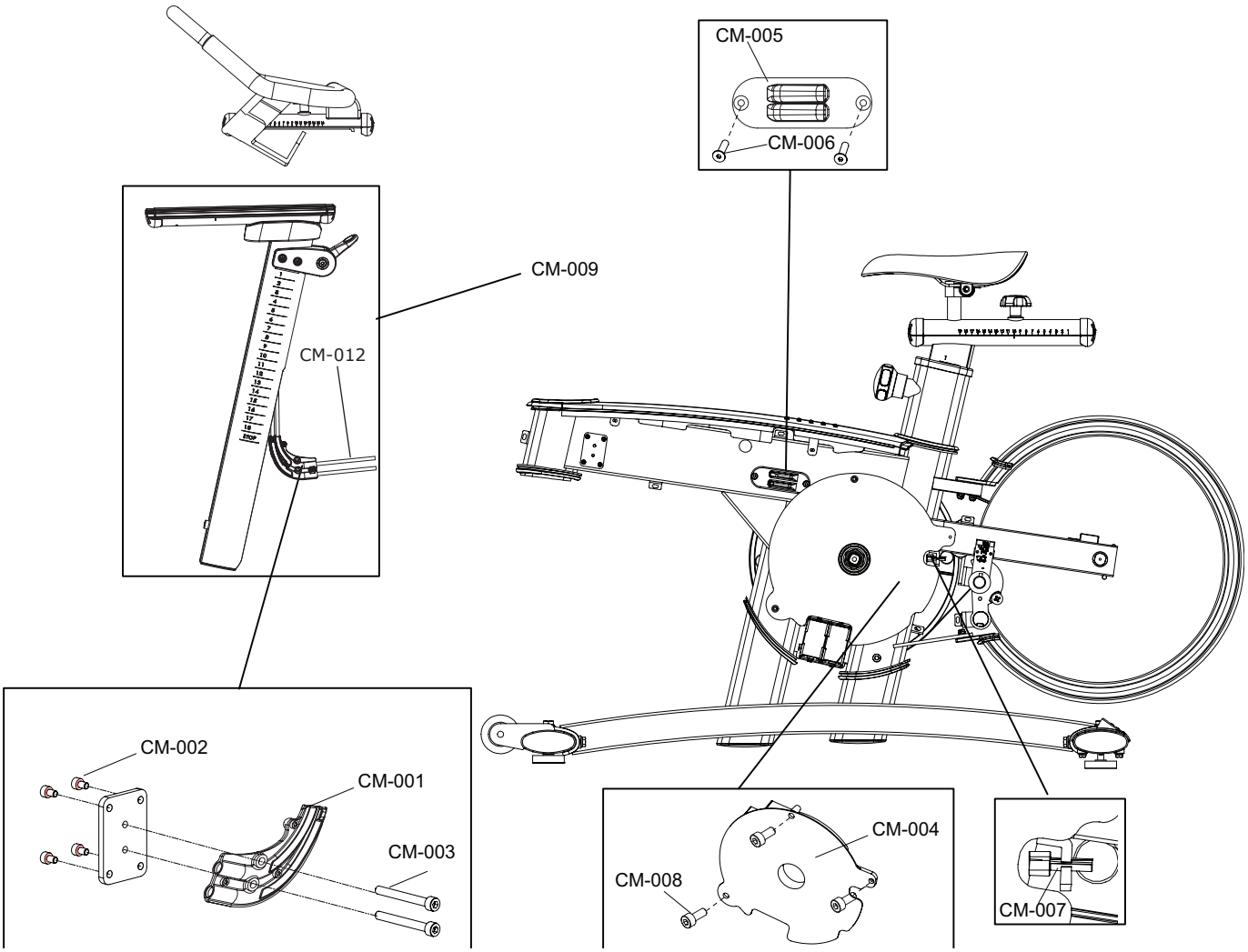

Parts List

Item	Alpha Code	Part Number	Description
CM-001	GEB, GED, GEH	9177301	Cable Guide Assembly
CM-002	GEB, GED, GEH	9093701	Screw (4)
CM-003	GEB, GED, GEH	9176601	Screw (2)
CM-004	GEB, GED, GEH	9088902	Cable Shield
CM-005	GEB, GED, GEH	9073201	Cable Exit
CM-006	GEB, GED, GEH	9176501	Screw (2)
CM-007	GEB, GED, GEH	9088801	Brake Cable Adjustment Nut
CM-008	GEB, GED, GEH	9095301	Screw (3)
CM-009	GEB, GED, GEH	9171201	Handlebar Post / Cable Assembly
CM-010*	GEH,	9307901	Consumer Lock Out Cable
CM-011*	GEH	9308001	Consumer Lock Out Lock
CM-012	GEB, GED, GEH	9345901	Mechanical Brake Cable

* Items not shown in image

Drive System (DS)

Drive Belt and Crankshaft Assembly

Exploded View

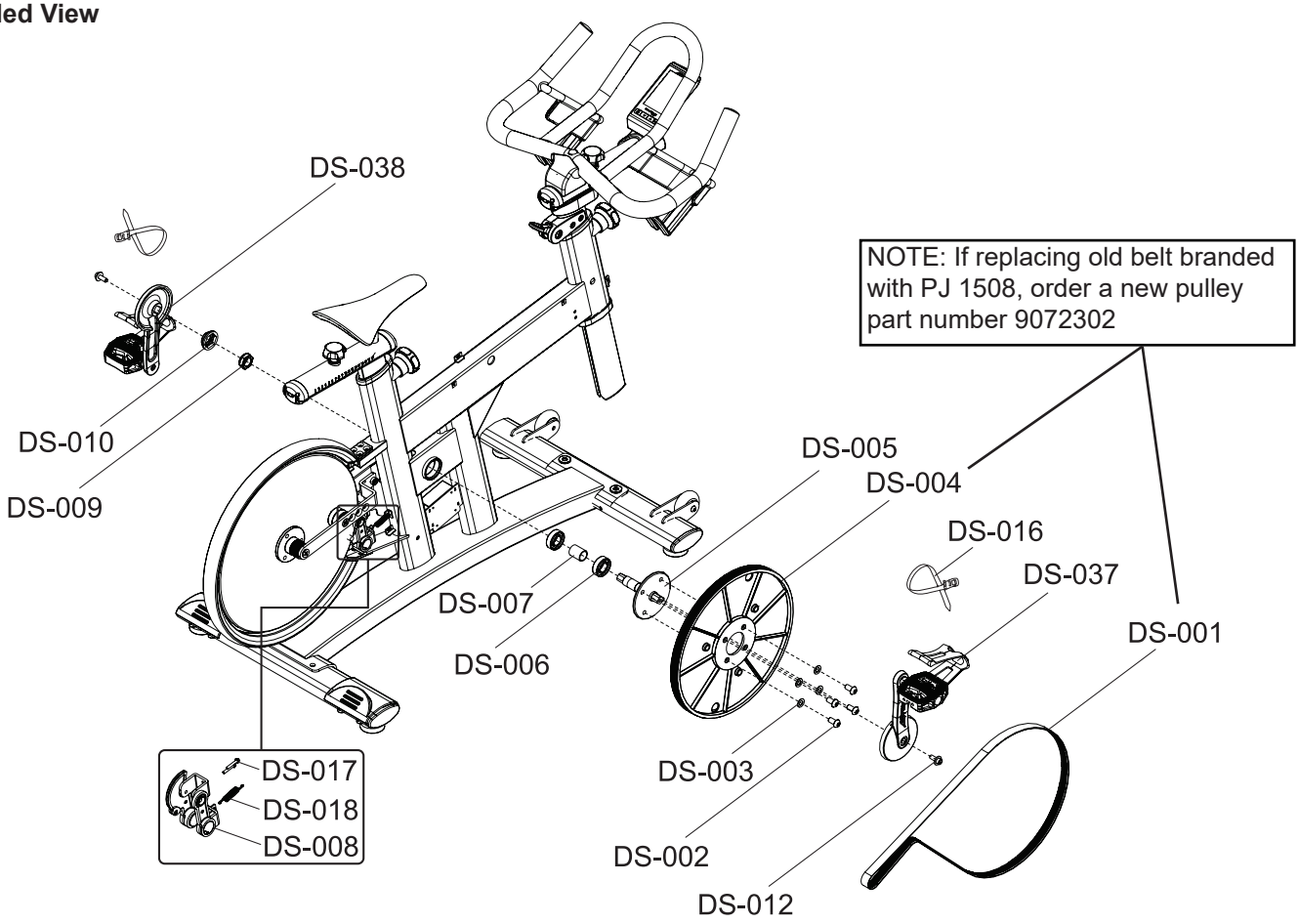

Parts List

Item	Alpha Code	Part Number	Description
DS-001	GEB, GED, GEH	150-03-00076-02	Poly V Belt
DS-002	GEB, GED, GEH	9094001	Screw (4)
DS-003	GEB, GED, GEH	9093901	Washer (4)
DS-004	GEB, GED, GEH	9072302	Drive Pulley
DS-005	GEB, GED, GEH	9083101	Crankshaft Weldment
DS-006	GEB, GED, GEH	9071601	Crankshaft Bearing (2)
DS-007	GEB, GED, GEH	9072101	Crank Bearing Spacer
DS-008	GEB, GED, GEH	9073401	Magnetic Brake Assembly
DS-009	GEB, GED, GEH	9087801	Crankshaft Nut
DS-010	GEB, GED, GEH	9087901	Crankshaft Nut Cover
DS-012	GEB, GED, GEH	9072201	Crank Bolt (2)
DS-016	GEB, GED, GEH	9171301	Pedal Strap *(pair)*
DS-017	GEB, GED, GEH	9177201	Bolt (2)
DS-018	GEB, GED, GEH	9098301	Magnetic Brake Spring
DS-037	GEB, GED, GEH	GK91-00002-0001	Right Pedal/Crank Assembly (includes Pedal Straps)
DS-038	GEB, GED, GEH	GK91-00002-0000	Left Pedal/Crank Assembly (inlcudes Pedal Straps)

Flywheel and Hub Assembly

Exploded View

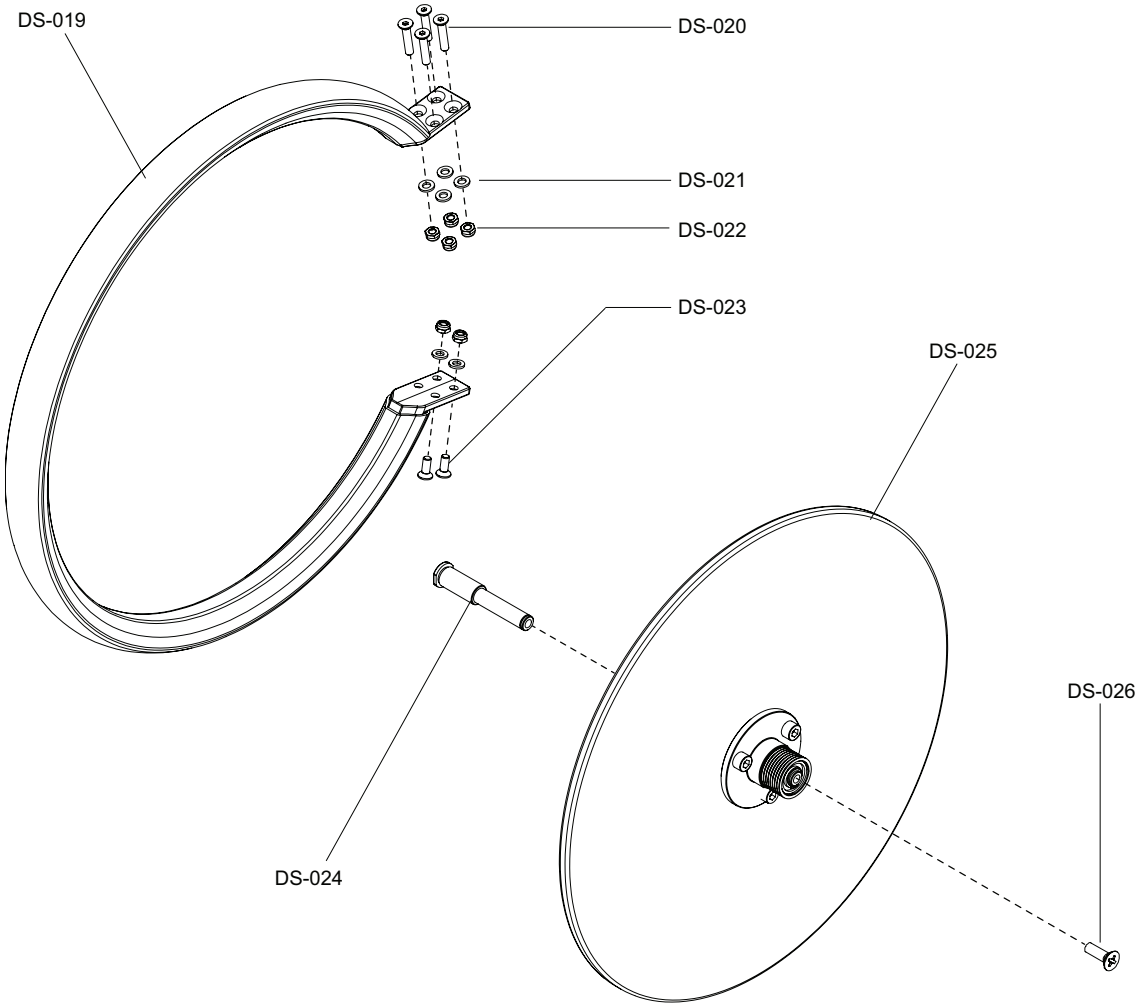

Parts List

Item	Alpha Code	Part Number	Description
DS-019	GEB, GED, GEH	9066701	Flywheel Guard
DS-020	GEB, GED, GEH	9091901	Bolt (4)
DS-021	GEB, GED, GEH	9096501	Washer (4)
DS-022	GEB, GED, GEH	9096401	Nut (4)
DS-023	GEB, GED, GEH	9091801	Bolt (2)
DS-024	GEB, GED, GEH	9071301	Flywheel Axle
DS-025	GEB, GED, GEH	9070801	Flywheel Assembly - (*includes flywheel axle and screw)*
DS-026	GEB, GED, GEH	9095101	Screw

Idler Assembly

Exploded View

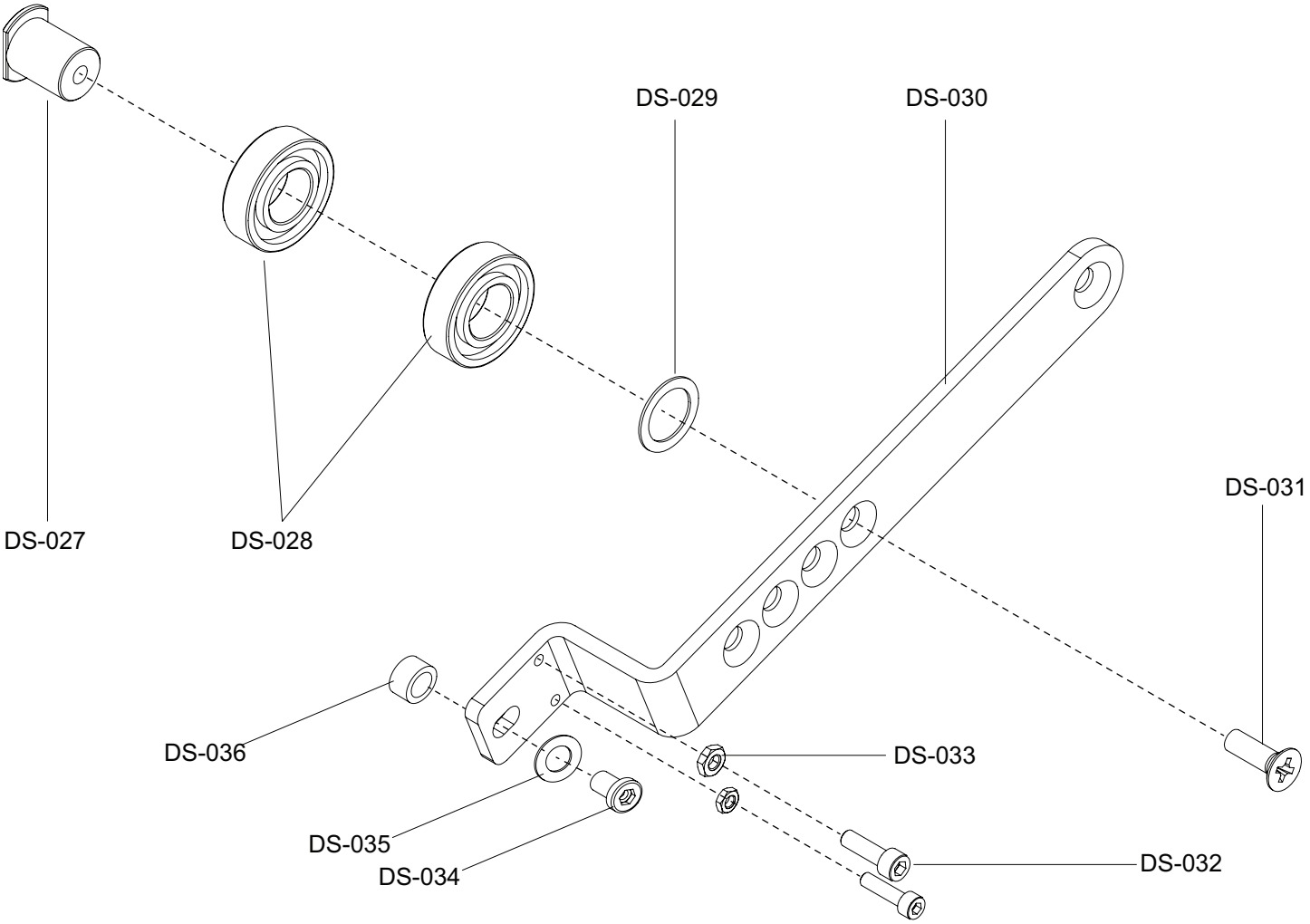

Parts List

Item	Alpha Code	Part Number	Description
DS-027	GEB, GED, GEH	9071501	Idler Shaft
DS-028	GEB, GED, GEH	9071601	Idler Bearing (2)
DS-029	GEB, GED, GEH	9091201	Washer
DS-030	GEB, GED, GEH	9071701	Idler and Flywheel Support Arm
DS-031	GEB, GED, GEH	9095101	Screw
DS-032	GEB, GED, GEH	9175601	Bolt (2)
DS-033	GEB, GED, GEH	9175501	Nut (2)
DS-034	GEB, GED, GEH	9091001	Screw
DS-035	GEB, GED, GEH	9175701	Washer
DS-036	GEB, GED, GEH	9084901	Spacer

Handlebar Mechanism (HM)

Console Support and Handlebars

Exploded View

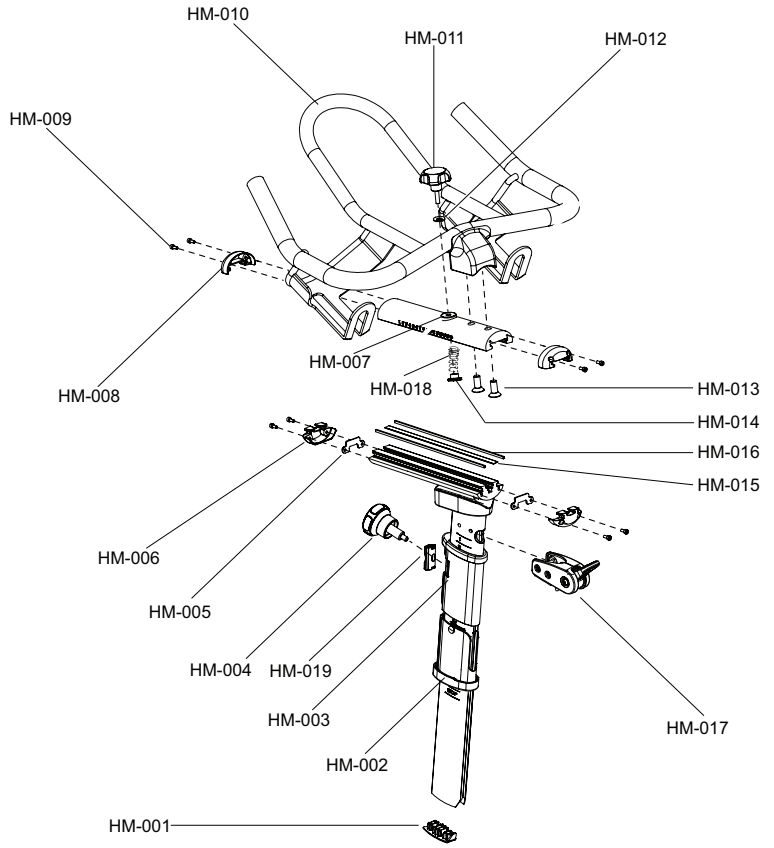

Parts List

Item	Alpha Code	Part Number	Description
HM-001	GEB, GED, GEH	9086401	Handlebar Post Bottom End Cap
HM-002	GEB, GED, GEH	9072801	Lower Sleeve
HM-003	GEB, GED, GEH	9072501	Upper Sleeve
HM-004	GEB, GED, GEH	9073101	Handlebar Vertical Adjustment Knob
HM-005	GEB, GED, GEH	9068402	Slide Limiter Plate SS (2)
HM-006	GEB, GED, GEH	9068201	Slider Bottom End Cap (2)
HM-007	GEB, GED, GEH	9083001	Handlebar Top Slider
HM-008	GEB, GED, GEH	9068301	Top Slider End Cap (2)
HM-009	GEB, GED, GEH	9095301	Screw (8)
HM-010	GEB, GED, GEH	9068701	Handlebar Dipped Weldment
HM-011	GEB, GED, GEH	9069201	Handlebar Slider Adjustment Knob
HM-012	GEB, GED, GEH	9095601	Washer
HM-013	GEB, GED, GEH	9095501	Screw (2)
HM-014	GEB, GED, GEH	9072602	Handlebar Slider T-Nut
HM-015	GEB, GED, GEH	9086301	Handlebar Electrical Cable Cover
HM-016	GEB, GED, GEH	9082701	Handlebar Glide Strip (2)
HM-017	GEB, GED, GEH	9177401	Brake Lever Assembly
HM-018	GEB, GED, GEH	9085201	T-Nut Spring
HM-019	GEB, GED, GEH	9073001	Handlebar Clamp *(puck)*

Shrouds, Covers and Gaskets (SC)

Exploded View

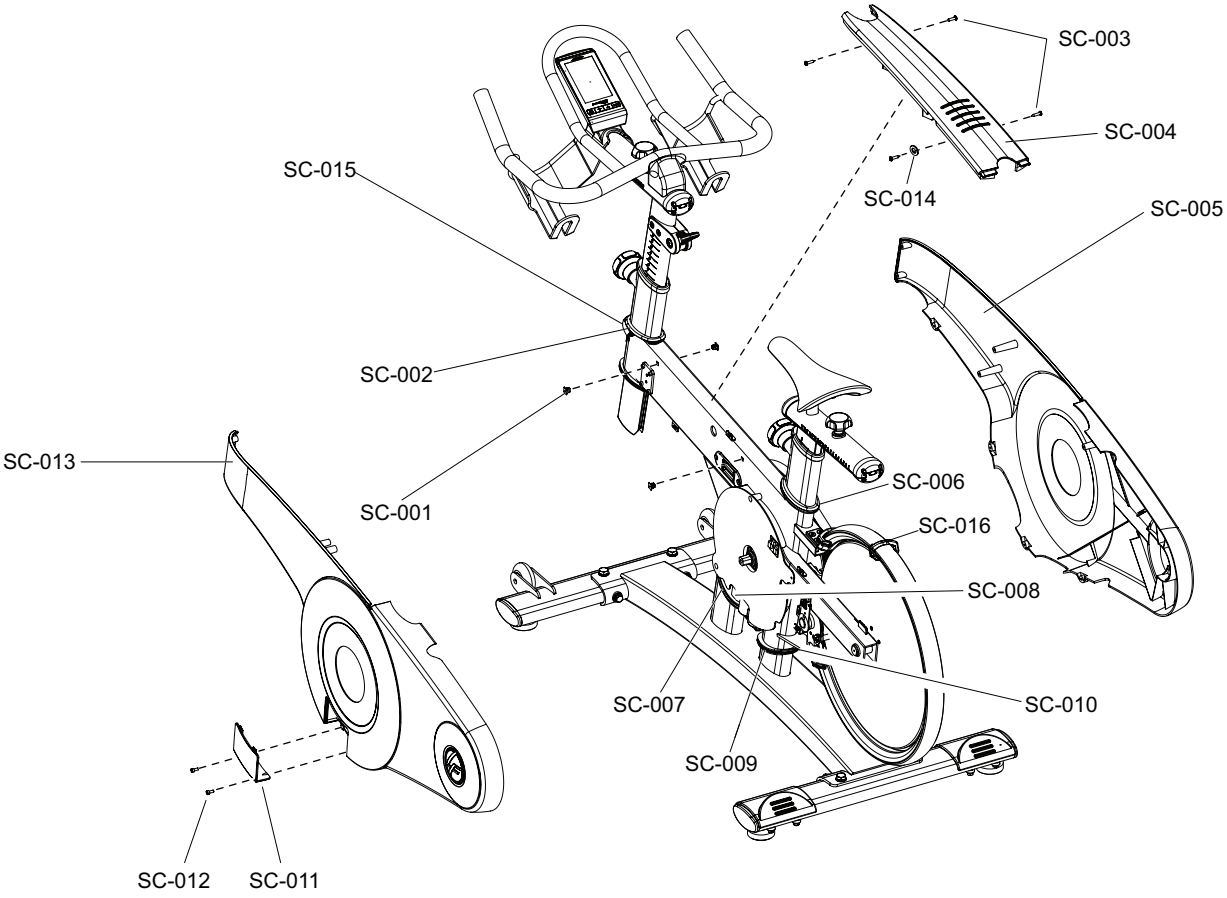

Parts List

Item	Alpha Code	Part Number	Description
SC-001	GEB, GED, GEH	9084701	Shroud and PCB Grommet
SC-002	GEB, GED, GEH	9076001	Upper Handlebar Tube Gasket
SC-003	GEB, GED, GEH	9094401	Screw (4)
SC-004	GEB, GED, GEH	9075301	Top Shroud
SC-005	GEB, GED, GEH	9098201	Right Shroud Assembly *(includes items with *)*
SC-006	GEB, GED, GEH	9075901	Seat Tube Ring (Upper)
SC-007	GEB, GED, GEH	9098001	Foot Tube Gasket (Left) **
SC-008	GEB, GED, GEH	9097901	Foot Tube Gasket (Right) *
SC-009	GEB, GED, GEH	9097701	Lower Seat Tube Gasket (Left) **
SC-010	GEB, GED, GEH	9097801	Lower Seat Tube Gasket (Right) *
SC-011	GEB, GED, GEH	9075202	Battery Cover V2
SC-012	GEB, GED, GEH	9095301	Screw (16)
SC-013	GEB, GED, GEH	9098101	Left Shroud Assembly *(includes items with **)*
SC-014	GEB, GED, GEH	9177501	Washer (4)
SC-015	GEB, GED, GEH	9075401	Front Top Cover
SC-016	GEB, GED, GEH	9075801	Flywheel Guard Gasket

Stabilizer Assembly (SA)

Exploded View

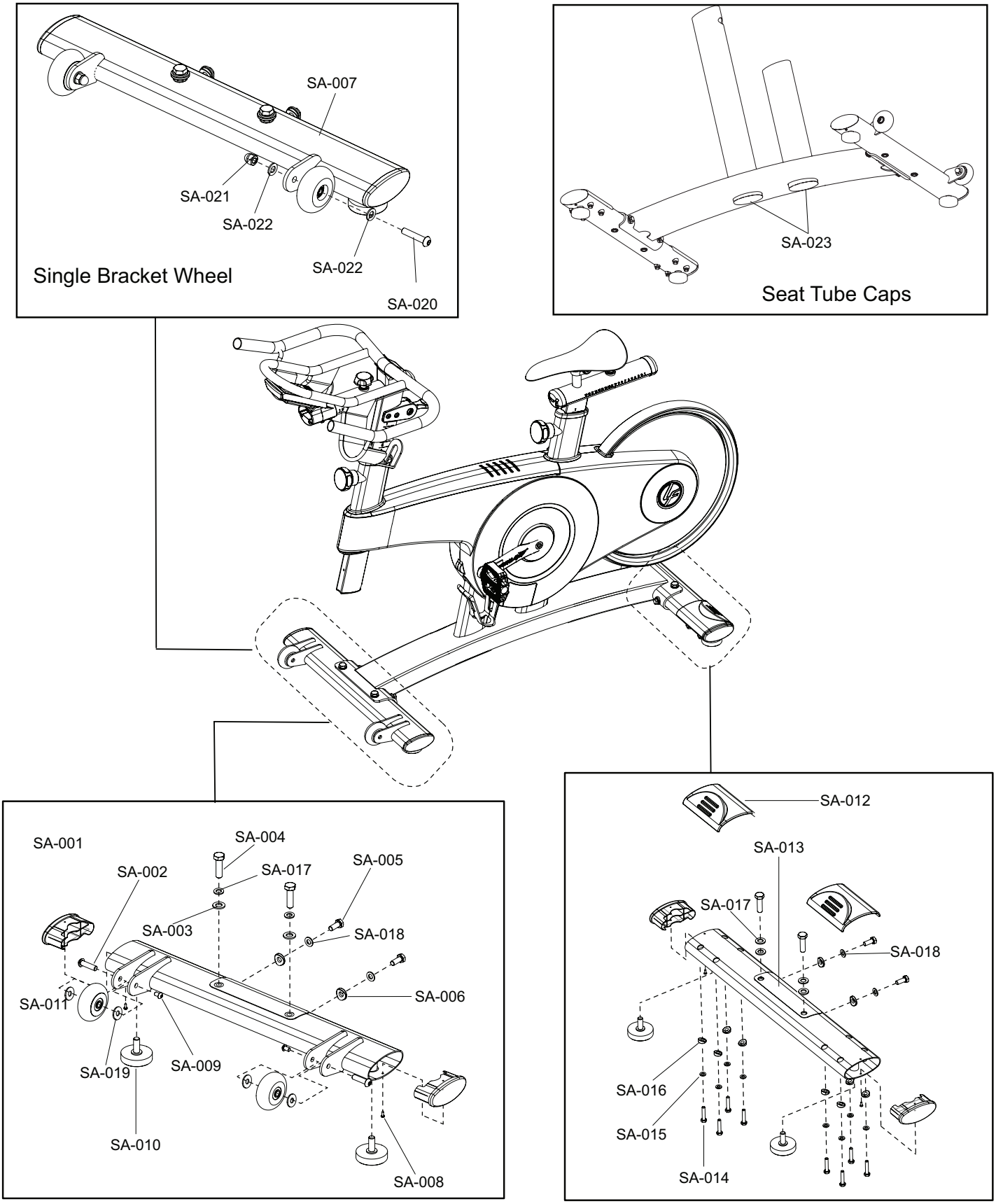

Stabilizer Assembly (SA)

Parts List

Item	Alpha Code	Part Number	Description
SA-001	GEB, GED, GEH	9076701	Stabilizer End Cap (4)
SA-002	GEB	9176801	Wheel Axle (2)
SA-003	GEB, GED, GEH	9175901	Washer (2)
SA-004	GEB, GED, GEH	9176101	Bolt (2)
SA-005	GEB, GED, GEH	9094501	Bolt (2)
SA-006	GEB, GED, GEH	9077501	Molded Washer (2)
SA-007	GED, GEH	9076201	Front Stabilizer Weldment
SA-008	GEB, GED, GEH	9094401	Screw (2)
SA-009	GEB	9089501	Screw (2)
SA-010	GEB, GED, GEH	9076902	Leveler (4)
SA-011	GEB, GED, GEH	9076801	Front Stabilizer Wheel (2)
SA-012	GEB, GED, GEH	9077301	Stretch Platform (2)
SA-013	GEB, GED, GEH	9077101	Rear Stabilizer Weldment
SA-014	GEB, GED, GEH	9094301	Bolt (8)
SA-015	GEB, GED, GEH	9176201	Washer (8)
SA-016	GEB, GED, GEH	9077401	Stretch Platform Washer (8)
SA-017	GEB, GED, GEH	9176001	Washer (4)
SA-018	GEB, GED, GEH	9088601	Washer (4)
SA-019	GEB	9088601	Washer (4)
SA-020	GED, GEH	9407001	Button Head Screw (2)
SA-021	GED, GEH	9407101	Acorn Nut (2)
SA-022	GED, GEH	9407201	Washer (4)
SA-023	GEB, GED	9067001	Seat Tube Cap (2)

Seat Mechanism (SM)

Wide Post Assembly - 01 version
(Uses 2 screws per endcap)

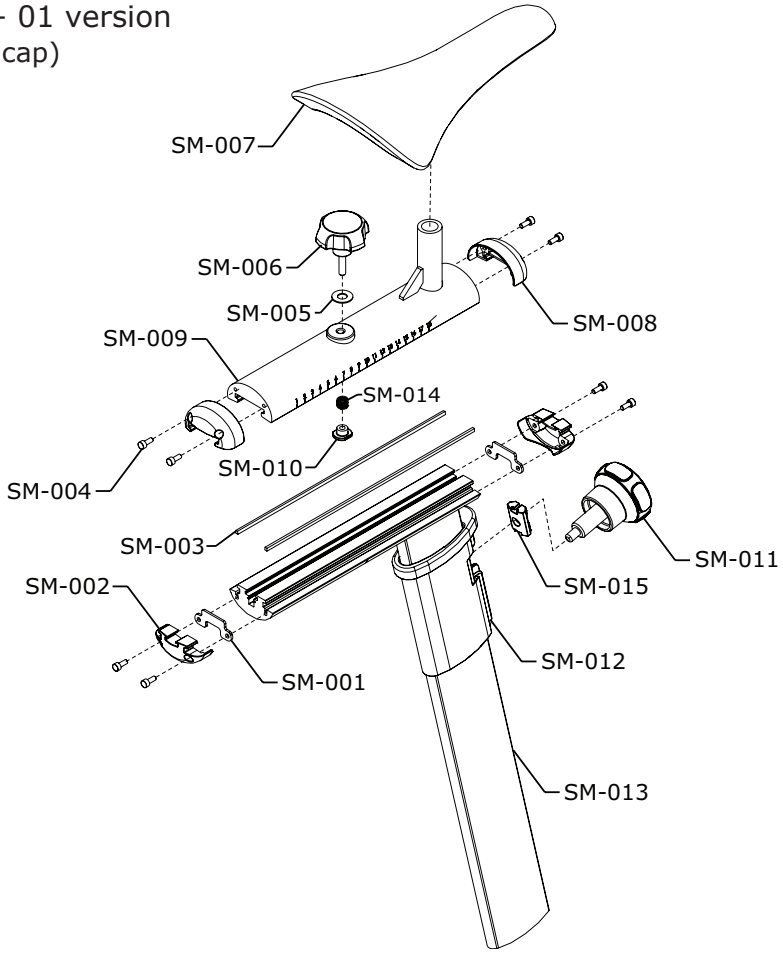

Narrow Post Assembly - 02 version
(Uses 1 screw per endcap)

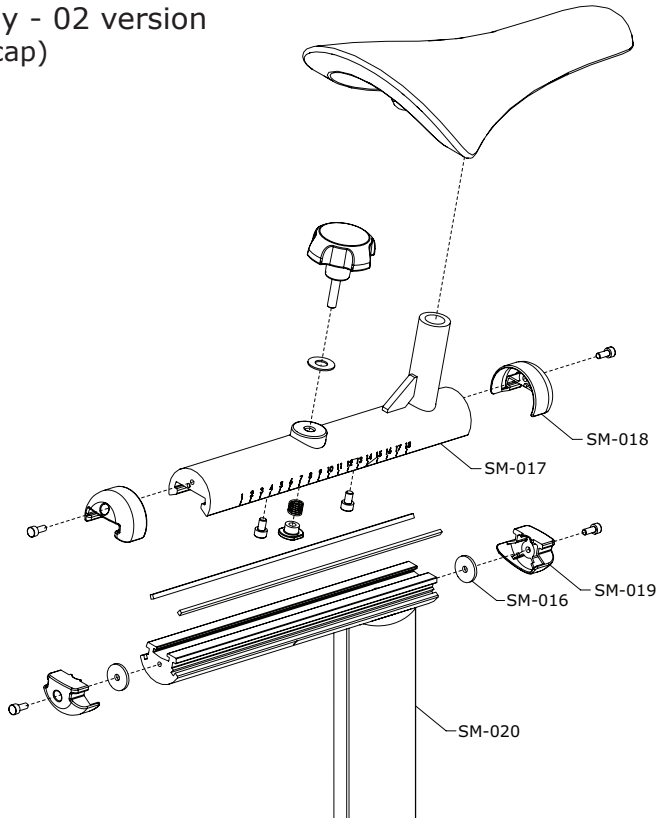

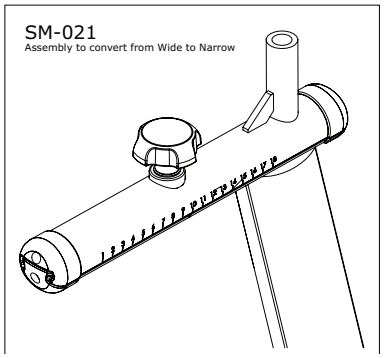

Seat Mechanism (SM)

Parts List

Item	Alpha Code	Part Number	Description
SM-001	GEB	9068402	Slide Limiter Plate SS (2)
SM-002	GEB	9068201	Slider Bottom End Cap (2)
SM-003	GEB, GED, GEH	9068501	Seat Glide Strip (2)
SM-004	GEB, GED, GEH	9095301	Screw (8)
SM-005	GEB, GED, GEH	9095601	Washer
SM-006	GEB, GED, GEH	9069201	Seat Slider Adjustment Knob
SM-007	GEB, GED, GEH	9097401	Saddle Assembly
SM-007	GEB, GED, GEH	GECWS-ALLXX-01	Wide Saddle Assembly
SM-008	GEB	9068301	Slider Top End Cap (2)
SM-009	GEB	9177901	Seat Upper Slider
SM-010	GEB, GED, GEH	9085101	Seat Slider T-Nut
SM-011	GEB, GED, GEH	9073101	Vertical Adjust Knob
SM-012	GEB, GED, GEH	9072501	Seat Post Sleeve
SM-013	GEB	9067401	Seat Post Weldment
SM-014	GEB, GED, GEH	9085201	T-Nut Spring
SM-015	GEB, GED, GEH	9073001	Seat Post Clamp *(puck)*
SM-016	GED, GEH	9238001	Slide Limiter Washer (2)
SM-017	GED, GEH	9237501	Seat Upper Slider Narrow
SM-018	GED, GEH	9237901	Slider Top End Cap Narrow
SM-019	GED, GEH	9237801	Slider Bottom End Cap Narrow
SM-020	GED, GEH	9237201	Seat Post Weldment Narrow
SM-021	GEB	9237101	Seat Post/Slider Assembly Narrow

Wiring

Wiring Diagram

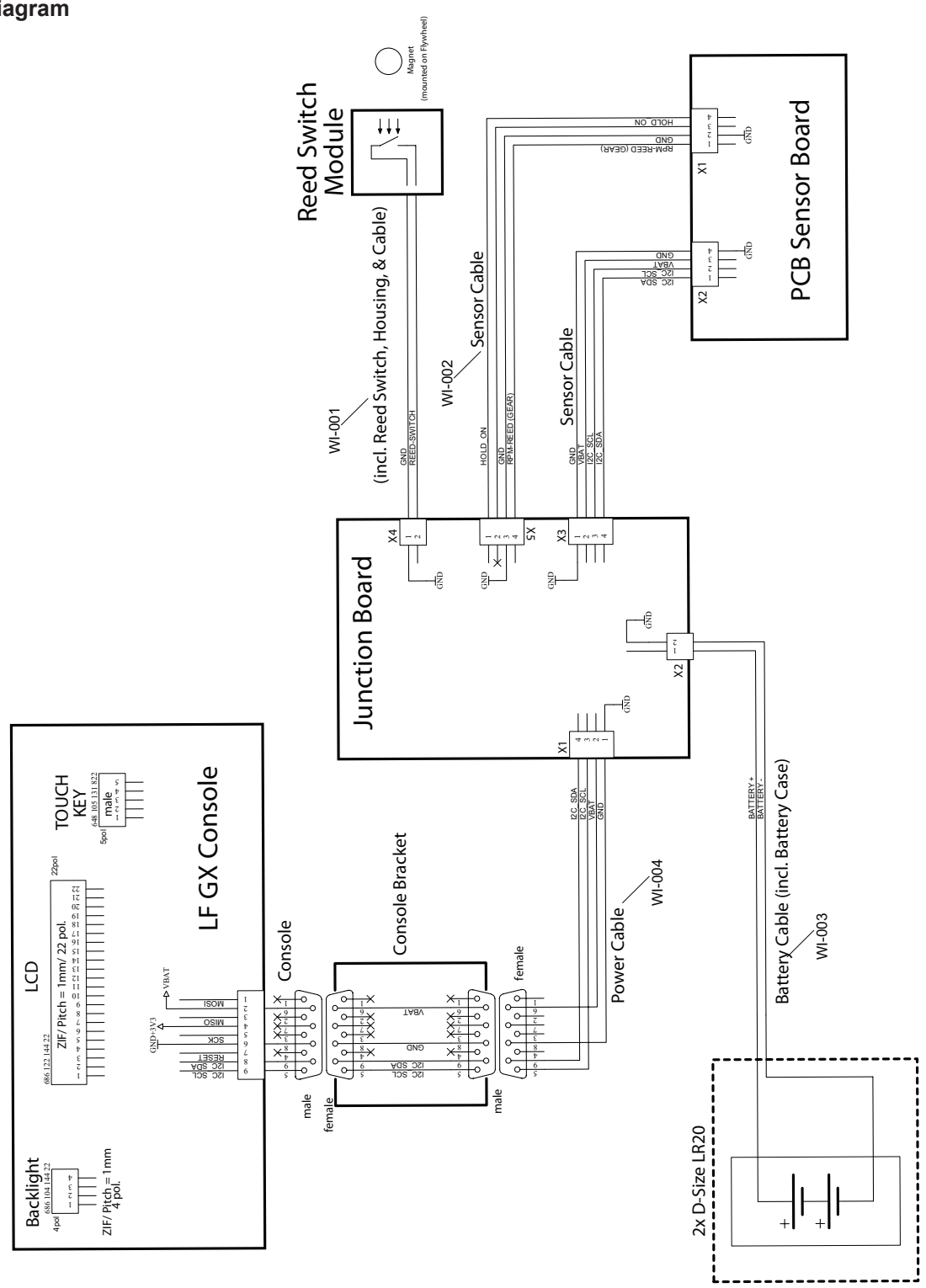

Parts List

Item	Alpha Code	Part Number	Description
W1-001	GEB, GED, GEH	9079501	Reed Switch, Housing, & Cable
W1-002	GEB, GED, GEH	9096701	Sensor Cable (2)
W1-003	GEB, GED, GEH	9096901	Battery Cable *(includes Battery Case)*
W1-004	GEB, GED, GEH	9086501	Power Cable

Corporate Headquarters

Columbia Centre III, 9525 West Bryn Mawr Avenue, Rosemont, Illinois 60018 • U.S.A.
847.288.3300 • FAX: 847.288.3703
Service phone number: 800.351.3737 (toll-free within U.S.A., Canada)
Global Website: www.lifefitness.com

© 2018 Life Fitness, a division of Brunswick Corporation. All rights reserved.